PRIVATE CARS

XANTIA-XM-SYNERGIE 2001

«The technical information contained in this document is intended for the exclusive use of the trained personnel of the motor vehicle repair trade. In some instances, this information could concern the security and safety of the vehicle. The information is to be used by the professional vehicle repairers for whom it is intended and they alone would assume full responsibility to the exclusion of that of the manufacturer».
"The technical information appearing in this brochure is subject to updating as the characteristics of each model in the range evolve. Motor vehicle repairers are invited to contact the CITROËN network periodically for further information and to obtain any possible updates».

CAR 050008
Book 2

PRESENTATION

THIS HANDBOOK summarises the characteristics, adjustments, checks and special features of **CITROEN** vehicles, not including COMMERCIAL vehicles for which there exists a separate handbook.

The handbook is divided into the following groups representing the main functions :

GENERAL - ENGINE - INJECTION - IGNITION - CLUTCH, GEARBOX, DRIVESHAFTS - AXLES, SUSPENSION, STEERING - BRAKES - HYDRAULICS - ELECTRICAL - AIR CONDITIONING.

In each section, the vehicles are dealt with in the following order : XANTIA-XM-SYNERGIE and all models where applicable.

The information given in this handbook is based on vehicles marketed in **EUROPE**.

IMPORTANT

If you find that this handbook does not always meet your requirements, **we invite you to send us your suggestions** which we will take into account when preparing future publications. For example :

- INSUFFICIENT INFORMATION
- SUPERFLUOUS INFORMATION
- NEED FOR MORE DETAILS

Please send your comments and suggestions to :

CITROEN U.K. Ltd.
221, Bath Road,
SLOUGH,
SL1 4BA.
U.K.

INDEX

PRESENTATION

THIS HANDBOOK summarises the characteristics, adjustments, checks and special features of **CITROEN** vehicles, not including COMMERCIAL vehicles for which there exists a separate handbook.

The handbook is divided into the following groups representing the main functions :

GENERAL - ENGINE - INJECTION - IGNITION - CLUTCH, GEARBOX, DRIVESHAFTS - AXLES, SUSPENSION, STEERING - BRAKES - HYDRAULICS - ELECTRICAL - AIR CONDITIONING.

In each section, the vehicles are dealt with in the following order : XANTIA-XM-SYNERGIE and all models where applicable.

The information given in this handbook is based on vehicles marketed in **EUROPE**.

IMPORTANT

If you find that this handbook does not always meet your requirements, **we invite you to send us your suggestions** which we will take into account when preparing future publications. For example :

- INSUFFICIENT INFORMATION
- SUPERFLUOUS INFORMATION
- NEED FOR MORE DETAILS

Please send your comments and suggestions to :

CITROEN U.K. Ltd.
221, Bath Road,
SLOUGH,
SL1 4BA.
U.K.

INDEX

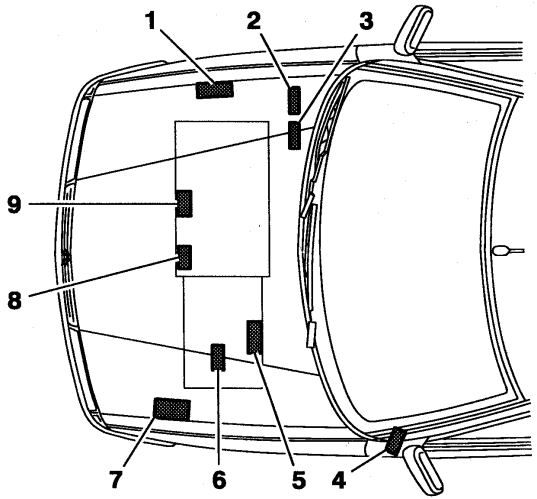

1. Manufacturer's cold stamp.
2. R.P. organisation N°.
3. Paint code.
4. 01/02/99 ➔ Label :
   - Pression de gonflage.
   - N° organisation P.R.
   - Code peinture
5. Automatic gearbox identification ref.
6. Manual gearbox identification ref.
7. Manufacturer's name plate.
8. XU5 - XU7 - ES9J4 engine plate.
9. XU10 - XUD engine plate.

E1AP07ED

XANTIA - All Types	IDENTIFICATION OF VEHICLES					
	PETROL SALOON					
	1.6 i	1.8 i	1.8 i 16 V			
			Auto.		Auto.	
	SX	SX	SX			
Emission standard	L3				L4	
Type code	X1 BFZF	X1 BFXF	X1 LFYM	X1 LFYF	X1 LFYN	X1 LFYB
Engine type	BFZ	BFX	LFY			
Cubic capacity (cc)	1580	1761				
Fiscal rating (hp)	7		8			
Gearbox type	BE3/5		AL4	BE3/5	AL4	BE3/5
Gearbox ident. plate	20 TE 00	20 TE 35	20 TP 52	20 TE 35 (*)	20 TP 52	20 TE 36

(*) = Long gearbox.

IDENTIFICATION OF VEHICLES						XANTIA - All Types
	PETROL SALOON					
	1.8i 16 V		2.0i 16 V		30.i V6	
	SX		SX	Exclusive	Activa	SX Exclusive
Emission standard	L4		L3			
Type code	X1 LFYN/IF (*)	X1 LFYB/IF (*)	X1 RFVM	X1 RFVF	X7 XFZF	X7 XFZM
Engine type	LFY		RFV		XFZ	
Cubic capacity (cc)	1761		1998		2946	
Fiscal rating (hp)			9		13	14
Gearbox type	AL4	BE3/5	AL4	BE3/5	ML/5	4HP20
Gearbox ident. plate	20 TP 52	20 TE 36	20 TE 53	20 TE 37	20 LE 89	20 HZ XX

(*) = IF = Fiscal incentive.

XANTIA - All Types	IDENTIFICATION OF VEHICLES				
	DIESEL SALOON				
	1.9 D	2.0 HDi (1)			
	Auto.				
	SX SX Aircon Pack	SX SX Aircon Pack	SX - SX Aircon Pack Exclusive Activa	SX Exclusive	SX Activa
Emission standard	L3	L3		L4	
Type code	X1 DHXM	X1 RFYF	X1 RHZF	X1 RHZB	X7 RHZB
Engine type	DHX	RHY	RHZ		
Cubic capacity (cc)	1905	1997			
Fiscal rating (hp)	7	6			
Gearbox type	AL4	BE3/5	ML/5		
Gearbox ident. plate	20 TP 50	20 TE 40	20 LE 84		

(1) HDi = High pressure Diesel injection

IDENTIFICATION OF VEHICLES					XANTIA - All Types
	PETROL ESTATE				
	1.8i	1.8i 16V			
	SX	SX - SX Aircon Pack		SX	
Emission standard	L3	L3		L4	
Type code	X2 LFXF	X2 LFYF	X2 LFYC	X2 LFYB/IF (*)	X2 LFYB
Engine type	LFX	LFY			
Cubic capacity (cc)	1761				
Fiscal rating (hp)	7	8	7		
Gearbox type	BE3/5				
Gearbox ident. plate	20TE 35	20 TE 36	20 TE 35	20 TE 36	

(*) = IF = Fiscal incentive.

XANTIA - All Types	IDENTIFICATION OF VEHICLES					
	PETROL ESTATE					
	2.0i 16V				3.0i V6	
	Auto.				Auto.	
	SX	SX Aircon Pack Exclusive	SX	SX Aircon Pack Exclusive	Exclusive	
Emission standard	L3					
Type code	X2 RFVM		X2 RFVF	X2 RFVM	X2 XFZF	X7 XFZM
Engine type	RFV				XFZ	
Cubic capacity (cc)	1998				2946	
Fiscal rating (hp)		9		9	14	13
Gearbox type	AL4		BE3/5		4HP20	ML/5
Gearbox ident. plate	20 TP 53		20 TE 37		20 HZ XX	20 LE 89

IDENTIFICATION OF VEHICLES				XANTIA - All Types
	DIESEL ESTATE			
	1.9 TD	2.0 HDi (*)		
	Auto.			
	SX SX Aircon Pack	SX SX Aircon Pack	SX - SX Aircon Pack Exclusive	SX Exclusive
Emission standard	**L3**	**L3**	**L4**	
Type code	**X2 DHXM**	**X2 RHYF**	**X2 RHZF**	**X2 RHZB**
Engine type	DHX	RHY	RHZ	
Cubic capacity (cc)	1905	1997		
Fiscal rating (hp)	7	6		
Gearbox type	AL4	BE3/5	ML/5	
Gearbox ident. plate	20 TP 50	20 TE 40	20 LE 84	

(1) HDi = High pressure Diesel injection

XANTIA - All Types	IDENTIFICATION OF VEHICLES					
	COMMERCIAL VERSIONS ALL TYPES			DUAL FUEL PETROL/LPG (1)		
	Diesel			Petrol		
	Saloon		Estate	Saloon		Estate
	2.0HDi (2)			1.8i 16V		
	SX Ambulance					
	X - SX Company	SX Company	SX Entreprise	SX	SX SX Aircon Pack	
Emission standard	L3			L3		
Type code	X1 RHYF	X1 RHZF	X2 RHYF/T (3)	X1 LFYC/GPL	X1 LFYC/GPL	X2 LFYC/GPL
Engine type	RHY	RHZ	RHY	LFY/GPL		
Cubic capacity (cc)	1997			1761		
Fiscal rating (hp)	6				7	
Gearbox type	BE3/5	ML/5	BE3/5	BE3/5		
Gearbox ident. plate	20 TE 40	20 LE 84	20 TE 40	20 TE 36	20 TE 35	

(1) = Liquid Petroleum Gas.
(2) HDi = High pressure Diesel injection.
(3) /T = Can be converted.

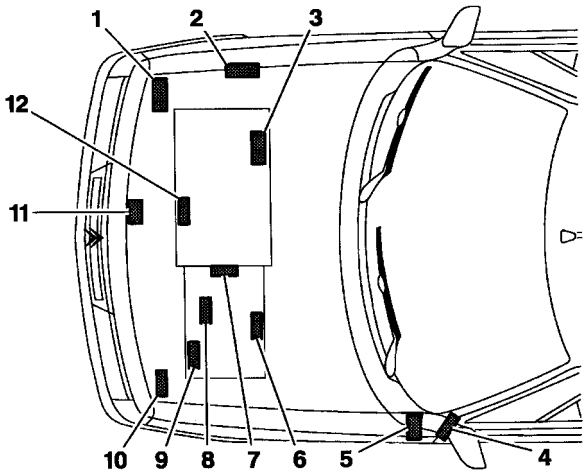

(*) : Applicable only to 1999 model year saloons

1. Bodyshell N°
2. Manufacturer's cold stamp
3. 6 cyl. engine plate
4. R.P. organisation N°. (*) 01/02/1999 ➔
   Label :
   - Tyre pressures.
   - R.P. organisation N°.
   - Paint code
5. R.P. organisation N°. ➔ 01/02/99
6. BE3 gearbox ident.
7. 4HP 18 gearbox ident.
8. MG gearbox ident.
9. ME5T gearbox ident.
10. Paint code ➔ 01/02/99 (*)
11. Manufacturer's plate
12. 4 cyl. engine plate

E1AP07FD

XM - All Types	IDENTIFICATION OF VEHICLES					
	PETROL SALOON					
	2.0i 16 V		2.0i Turbo CT		3.0i V6	
		Auto.		Auto.		Auto.
	SX		SX		SX - Exclusive	
Emission standard	L3					
Type code	Y4-CZ	Y4-TV	Y4-GG	Y4-TT	Y4-WG	Y4-WH
Engine type	RFV		RGX		XFZ	
Cubic capacity (cc)	1998				2946	
Fiscal rating (hp)	9	10		11	13	14
Gearbox type	BE3/5	4 HP 18	ME/5	4 HP 18	ML/5	4 HP20
Gearbox ident. plate	20 TD 01	20 GZ 5G	20 GM 32	20 GZ 1G	20 LE 59	20 HZ YY

IDENTIFICATION OF VEHICLES				XM Diesel
	DIESEL SALOON			
	2.1 TD Auto. SX			2.5 TD SX - Exclusive
Emission standard	**L3**		**L4**	**L3**
Type code	**Y4-GZ**	**Y4-RN**	**Y4-WE**	**Y4-NZ**
Engine type	P8C			THY
Cubic capacity (cc)	2088			2446
Fiscal rating (hp)	7	8	7	9
Gearbox type	ME/5	4 HP 18	ME/5	MG/5
Gearbox ident. plate	20 GM 31	20 GZ 5D	20 GM 31	20 KM 70

XM - All Types	IDENTIFICATION OF VEHICLES					
	PETROL ESTATE					
	2.0i		2.0i Turbo CT		3.0i V6	
		Auto.		Auto.		Auto.
	SX		SX-Commerce	SX	SX	
Emission standard	L3					
Type code	Y4-GB	Y4-TU	Y4-GM	Y4-TS	Y4-WJ	Y4-TN
Engine type	RFV		RGX		XFZ	
Cubic capacity (cc)	1998				2946	
Fiscal rating (hp)	9	10	9	10	13	14
Gearbox type	BE3/5	4 HP 18	ME/5	4 HP 18	ML/5	4 HP 20
Gearbox ident. plate	20 GM 36	20 GZ 5G	20 GM 33	20 GZ 1G	20 LE 59	20 HZ YY

IDENTIFICATION OF VEHICLES					XM - All Types
	DIESEL ESTATE				Commercial Estate
	2.1 TD			2.5 TD	2.1 TD
		Auto.			
	SX Commerce		SX	SX Commerce	SX Ambulance
Emission standard	L3		L4	L3	
Type code	Y4-MZ	Y4-CW	Y4-WF	Y4-RM	Y4-GZ
Engine type	P8C			THY	P8C
Cubic capacity (cc)	2088			2446	2088
Fiscal rating (hp)	7	8	7	9	7
Gearbox type	ME/5	4 HP 18	ME/5	MG/5	ME/5
Gearbox ident. plate	20 GM 31	20 GZ 5D	20 GM 31	20 KM 70	20 GM 31

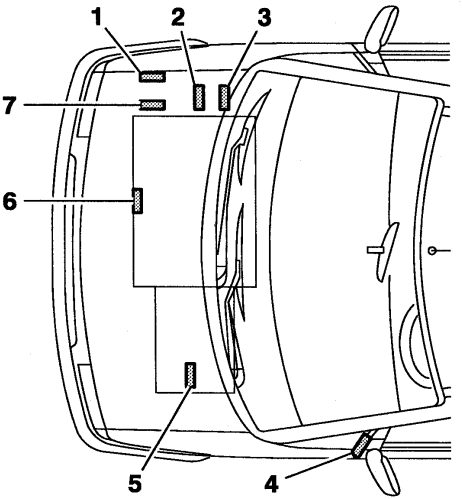

1. Manufacturer's cold stamp
2. R.P. organisation No.
3. Paint code
4. 01/02/99 ➔ Label :
   - Tyre pressures.
   - R.P. Organisation No.
   - Paint code.
5. Gearbox ident.
6. Engine plate
7. Manufacturer's plate

E1AP07GD

IDENTIFICATION OF VEHICLES					SYNERGIE - All Types
	PETROL		DIESEL		
	2.0i 16 V		2.0 HDi		2.0 16 V HDi
		Auto.			
	X – SX Exclusive		X – SX	X Taxi – SX Exclusive	
Emission standard	IF L5 (*)		L3		L4
Type code	AF RFNC/IF	AF RFNF/IF	AF RHZA/T	AF RHZA	AF RHWB
Engine type	RFN		RHZ		RHW
Cubic capacity (cc)	1997				
Fiscal rating (hp)	9	10	6		
Gearbox type	BE4/5	AL4	ML5		
Gearbox ident. plate	DL26 - DL27	20 TP 31	20 LE 91		

Draining method.

The oil capacities are defined according to the following methods.

1) **-** Vehicle on level surface (in high position, if equipped with hydropneumatic suspension).

2) **-** Engine warm (oil temperature **80°C**).

3) **-** Draining of the oil sump + removal of the cartridge (duration of draining + dripping = **15 mm**).

4) **-** Refit plug + cartridge.

5) **-** Engine filling.

6) **-** Engine starting (allowing the cartridge to be filled).

7) **-** Engine stopped (stationary for **5 mm**).

ESSENTIAL : Systematically check the oil level using the oil dipstick.

CAPACITIES (in litres)										XANTIA - All Types
	XANTIA									
	Petrol									
	1.6i	1.8i		1.8i 16V		2.0i 16V		3.0i 6V		
					Auto.		Auto.		Auto.	
Engine type	BFZ	BFX	LFX	LFY		RFV		XFZ		
Engine angle									30°	
Engine with filter change	4.75			4.75 - 4.25 **(1)**		4.25		5.25		
Between Min. and Max.	1.3			1				2		
5-speed gearbox	1.8					1.8		1.8		
Automatic gearbox					6		6		8.3	
after oil change					3		3		5.3	
Hydraulic or brake circuit	5.8									
Cooling system	7 - 8.3 (2)			7.5		7.5 - 8.5 (2)		10		
Fuel tank capacity	65									

(1) Air conditioning **(2)** Depending on equipment - **NOTE : Engine, systematically check the oil level using the oil dipstick.**

XANTIA - All	CAPACITIES (in litres)		
	XANTIA		
	Diesel		
	1.9 D	2.0 HDi	
	Auto.		
Engine type	DHX	RHY	RHZ
Engine angle			30°
Engine with filter change	4.25 - 4 **(1)**	4.5 - 4.25 **(1)**	
Between Min. and Max.	1.5		
5-speed gearbox		1.8	
Automatic gearbox	8		
after oil change	3		
Hydraulic or brake circuit	5.8		
Cooling system	9		8.5 - 11 **(1)**
Fuel tank capacity	65		

(1) Air conditioning - **NOTE : Engine, systematically check the oil level using the oil dipstick.**

CAPACITIES (in litres)										XM - All Types
	XM									
	Petrol						Diesel			
	2.0i Turbo CT		2.0i 16 V		3.0i		2.1 TD		2.5 TD	
		Auto.		Auto.		Auto.		Auto.		
Engine type	RGX		RFV		XFZ		P8C		THY	
Engine with filter change (a)	4.75 - 4.5 **(1)**		4.25		5.25		5 - 4.5 **(1)**		8	
Between Min. and Max. (b)	1.4 - 1.2 **(1)**		1		2		1.45 - 1.25 **(1)**		3	
5-speed gearbox	1.9		1.9		1.8		1.85		2.2	
Automatic gearbox		7.5		7.5		8.3		7.5		
after oil change		2.4		2.4		5.3		2.4		
Hydraulic or brake circuit	5.4				5		5.4			
Cooling system	10.8 - 11.3 **(2)**		8.8 - 11.5 **(2)**		9.4		11.4 - 12 **(2)**	13.2		
Fuel tank capacity	80						80			

(1) Air conditioning **(2)** Depending on equipment - **NOTE : Engine, systematically check the oil level using the oil dipstick**.

SYNERGIE - All Types	CAPACITIES (in litres)			
	SYNERGIE			
	Petrol		Diesel	
	2.0i 16V	Auto.	2.0 HDi	2.0 HDi 16V
Engine type	RFN		RHZ	RHW
Engine angle			21°	
Engine with filter change	4.25		4.5	4.75
Between Min. and Max.	1.7		1.4	1.9
5-speed gearbox	1.8		1.8	
Automatic gearbox		8		
after oil change		3		
Hydraulic or brake circuit	Sans ABR : 0.47 - Avec ABR : 0.52			
Cooling system	7		8.5	
Fuel tank capacity	80		80	

(1) Air conditioning - **NOTE : Engine, systematically check the oil level using the oil dipstick.**

S.A.E. Norm - Table for selection of engine oil grade

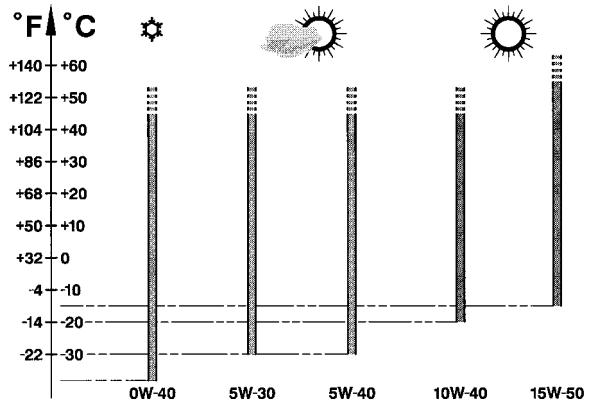

E4AP006D

Factory evolutions in 2000 model year

CITROËN engines are lubricated at the factory with **TOTAL** oil of grade **S.A.E.5W-30**.
TOTAL oil of grade **S.A.E.5W-30** allows improved fuel economies *(approx. 2.5%).*

This oil is not used in the following engines :

- **XU10 4 RS – XSARA VTS 2.0i 16V** *(3-door)*
- **SOFIM – RELAY 2.8 D** and **2.8 TD.**

Engine oil norms

These engine oils have been classified by the following recognised organisations:
SAE : Society of Automotive Engineers.
API : American Petroleum Institute.
ACEA : Association des Constructeurs Européens d'Automobiles

ALL TYPES	LUBRICANTS - TOTAL recommended oils

Selection of engine oil grades recommended for climatic conditions in countries of distribution

ACEA Norms

The first letter corresponds to the type of engine concerned :
- **A : petrol** and **dual fuel petrol / LPG** engines.
- **B : diesel** engines.

The figure following the first letter corresponds to the type of oil.
- **1 :** highly fluid oils, for reducing friction and lowering fuel onsumption.
- **3 :** high performance oils.

The number after that (**96** or **98**) corresponds to the year of creation of the norm.

NOTE : From **01/03/2000,** all engine oils must comply with **ACEA-98 norms.**

Example :
ACEA A1-98 / B1-98 : Blended oils for all engines, permetting fuel economy *(complying with **ACEA 98** norms).*

API Norms

The first letter corresponds to the type of fuel used by the engine :
- **S : petrol** and **dual fuel petrol / LPG** engines.
- **C : diesel** engines.

The second letter corresponds to the degree of evolution, in ascending order.
Example : The norm **SJ** is more severe than the norm **SH** and corresponds to a higher level of performance.
The adding of the letters **EC** indicates that the engine oil concerned is an oil which permits fuel economy.
EC : Energy Conserving, reduction in fuel consumption.

Examples :

API SJ / CF : Blended oils for **diesel and dual fuel petrol / LPG** engines
API CF / EC : Oils specifically for **diesel** engines, permitting fuel economy.

API SJ / CF / EC : Blended oils for all engines, permetting fuel economy.

LUBRICANTS - TOTAL recommended oils | ALL TYPES

Recommendations.
Denominations of **TOTAL** oils, according to country of marketing :

TOTAL ACTIVA (France only).
TOTAL QUARTZ (outside France).

IMPERATIVE : From 1999 model year, to preserve engine performance, all engines fitted in CITROEN vehicles must be lubricated with high quality oils (synthetic or semi-synthetic)

These oils must comply with the following norms :

Petrol and **dual fuel petrol / LPG** engines: **ACEA A3-98** and **API SJ**.
Diesel engines: **ACEA B3-98** and **API CF**.

ATTENTION : Engines fitted in CITROEN vehicles prior to 2000 model year must not be lubricated with oil complying with standards ACEA A1-98 / B1-98 and API SJ/CF EC.

Summary

Model year	Types of engine	ACEA norms	API norms
2001 model year	Petrol and dual fuel petrol / LPG engines	**A3-98 or A1-98 (*)**	**SJ or SJ / EC (*)**
	Diesel engines	**B3-98 or B1-98 (*)**	**CF or CF / EC (*)**

Engine oil norms to be respected in **2001 model year**.

ALL TYPES	LUBRICANTS - TOTAL recommended oils		
	S.A.E. grades	**SPI norms**	**ACEA norms**
Blended oils for all engines (petrol, dual-fuel petrol / LPG and diesel)			
TOTAL ACTIVA 9000 TOTAL QUARTZ 9000	**5W-40**	**SJ / CF**	**A3-98 / B3-98**
TOTAL ACTIVA 9000 (*) TOTAL QUARTZ 9000 (*)	**5W-30**	**SJ / CF EC**	**A1-98 / B1-98**
TOTAL ACTIVRAC	**10W-40**	**SJ / CF**	**A3-98 / B3-98**
(*) = Blended oils for all engines, permitting fuel economy.			
Oils specifically for petrol and dual-fuel petrol / LPG engines			
TOTAL ACTIVA 7000 TOTAL QUARTZ 7000	**10W-40**	**SJ**	**A3-98**
TOTAL QUARTZ 9000	**0W-40**		
TOTAL ACTIVA 7000 TOTAL QUARTZ 7000	**15W-50**		
Oils specifically for diesel engines			
TOTAL ACTIVA DIESEL 7000 TOTAL QUARTZ DIESEL 7000	**10W-40**	**CF**	**B3-98**
TOTAL ACTIVA DIESEL 7000 TOTAL QUARTZ DIESEL 7000	**15W-50**		
TOTAL ACTIVA 9000	**5W-40**		

LUBRICANTS - TOTAL recommended oils			ALL TYPES
	FRANCE		
	Blended oils for all engines		
Metropolitan FRANCE	TOTAL ACTIVRAC	S.A.E : 10W-40 Norms	
	TOTAL ACTIVA		TOTAL ACTIVA DIESEL
	Blended oils for all engines	Oils specifically for petrol and dual-fuel petrol / LPG engines	Oils specifically for diesel engines
Metropolitan FRANCE	900 5W-40 9000 5W-30 (*)	7000 10 W-40	7000 10 W-40 9000 5W-40
New Caledonia Guadeloupe Saint-Martin La Réunion Martinique Guyana Tahiti Mauritius Mayotte	9000 5W-40	7000 15W-50	7000 15W-50
(*) = Blended oils for all engines, permitting fuel economy.			

ALL TYPES	LUBRICANTS - TOTAL recommended oils		
	EUROPE		
	TOTAL QUARTZ		TOTAL QUARTZ DIESEL
(*) = Blended oils for all engines, permitting fuel economy	**Blended oils for all engines**	**Oils specifically for petrol and dual-fuel petrol / LPG engines**	**Oils specifically for diesel engines**
Germany	**9000 5W-40 9000 5W-30 (*)**	**7000 10W-40 9000 0W-40**	**7000 10W-40**
Austria		**7000 10W-40**	
Belgium		**7000 10W-40 9000 0W-40**	
Bulgaria		**7000 10W-40**	
Cyprus		**7000 15W-50**	**7000 10W-40 7000 15W-50**
Croatia		**7000 10W-40**	**7000 10W-40**
Denmark		**7000 10W-40 9000 0W-40**	
Spain		**7000 10W-40 7000 15W-50**	**7000 10W-40 7000 15W-50**
Finland		**7000 10W-40 9000 0W-40**	**7000 10W-40**
Great Britain		**7000 10W-40**	

LUBRICANTS - TOTAL recommended oils			ALL TYPES
EUROPE (continued)			
	TOTAL QUARTZ		TOTAL QUARTZ DIESEL
(*) = Blended oils for all engines, permitting fuel economy	**Blended oils for all engines**	**Oils specifically for petrol and dual-fuel petrol / LPG engines**	**Oils specifically for diesel engines**
Greece	**9000 5W-40 9000 5W-30 (*)**	**7000 10W-40 7000 15W-50**	**7000 10W-40 7000 15W-50**
Holland		**7000 10W-40**	**7000 10W-40**
Hungary		**9000 0W-40**	
Italy		**7000 10W-40**	
Latvia		**7000 10W-40**	
Lithuania		**9000 0W-40**	
Macedonia		**7000 10W-40**	
Malta		**7000 10W-40 7000 15W-50**	**7000 10W-40 7000 15W-50**
Norway		**7000 10W-40 9000 0W-40**	**7000 10W-40**
Poland		**7000 10W-40**	
Portugal			
Slovak Republic			

GENERAL

ALL TYPES	LUBRICANTS - TOTAL recommended oils		
	EUROPE (continued)		
	TOTAL QUARTZ		TOTAL QUARTZ DIESEL
(*) = Blended oils for all engines, permitting fuel economy	**Blended oils for all engines**	**Oils specifically for petrol and dual-fuel petrol / LPG engines**	**Oils specifically for diesel engines**
Czech Republic	**9000 5W-40 9000 5W-30 (*)**	**7000 10W-40 9000 0W-40**	**7000 10W-40**
Romania		**7000 10W-40 7000 15W-50**	**7000 10W-40 7000 15W-50**
Russia		**7000 10W-40 9000 0W-40**	**7000 10W-40**
Slovenia		**7000 10W-40**	
Sweden		**7000 10W-40 9000 0W-40**	
Switzerland		**7000 10W-40**	
Turkey		**7000 10W-40 7000 15W-50 9000 0W-40**	**7000 10W-40 7000 15W-50**
Ukraine		**7000 10W-40 9000 0W-40**	**7000 10W-40**

LUBRICANTS - TOTAL recommended oils				ALL TYPES
		TOTAL QUARTZ		TOTAL QUARTZ DIESEL
		Blended oils for all engines	Oils specifically for petrol and dual-fuel petrol / LPG engines	Oils specifically for diesel engines
Australia New Zealand	OCEANIA	9000 5W-40	7000 10W-40	7000 10W-40
Angola - Ivory Coast Egypt - Ecuador - Gabon Madagascar - Morocco Dominican Republic Senegal - Tunisia	AFRICA	9000 5W-40	7000 15W-50	7000 15W-50
Argentina - Brazil - Chile Colombia - Cuba Guatemala - Paraguay Peru - El Salvador Uruguay	SOUTH AMERICA	9000 5W-40	7000 15W-50	7000 15W-50

ALL TYPES	LUBRICANTS - TOTAL recommended oils			
		TOTAL QUARTZ		TOTAL QUARTZ DIESEL
		Blended oils for all engines	Oils specifically for petrol and dual-fuel petrol / LPG engines	Oils specifically for diesel engines
China	SOUTH & EAST ASIA	9000 5W-40	7000 10W-40 7000 15W-50	7000 15W-50
South Korea			7000 10W-40	
Hong Kong - India Indonesia			7000 15W-50	
Japan			7000 10W-40 7000 15W-50	
Malaysia			7000 15W-50	
Singapore				
Taiwan			7000 10W-40 7000 15W-50	
Thaïland			7000 15W-50	
Vietnam				

LUBRICANTS - TOTAL recommended oils				ALL TYPES
		TOTAL QUARTZ		TOTAL QUARTZ DIESEL
		Blended oils for all engines	Oils specifically for petrol and dual-fuel petrol / LPG engines	Oils specifically for diesel engines
Saudi Arabia Bahrain Dubai United Arab Emirates Israel Jordan Kuwaït Lebanon Qatar Yemen	MIDDLE EAST	9000 5W-40	7000 15W-50	7000 15W-50

ALL TYPES	LUBRICANTS - TOTAL recommended oils	
Gearbox oils		
Manual gearbox	Europe Overseas France Asia	TOTAL TRANSMISSION (new formula) Norms S.A.E 75W-80
Automatic gearbox MB3	All countries	TOTAL FLUIDE ATX ou TOTAL FLUIDE AT 42. Special oil distributed by CITROEN (Part No. : 9730 94).
Automatic gearbox 4 HP 14 et 4 HP 18		TOTAL FLUIDE AT 42 ou Special oil distributed by CITROEN (Part No. : 9730 94).
Automatic gearbox 4 HP 20 et AL4		Special oil distributed by CITROEN (Part No. : 9736 22).
Transfer box and differential		TOTAL TRANSMISSION X 4
C MATIC gearbox		TOTAL FLUIDE T
Oils for power-assisted steering		
Power-assisted steering	All countries	TOTAL FLUIDE ATX

LUBRICANTS - TOTAL recommended oils				ALL TYPES
Engine coolant				
All countries	CITROEN Fluid Protection : - 35°C	**Packs**	**CITROEN Reference**	
			GLYSANTIN G 33	**REVCOGEL 2000**
		2 litres	**9979 70**	**9979 72**
		5 litres	**9979 71**	**9979 73**
		20 litres	**9979 76**	**9979 74**
		210 litres	**9979 77**	**9979 75**
Synthetic brake fluid				
All countries	CITROEN Fluid	**Packs**	**CITROEN Reference**	
		0.5 litre	**9979 05**	
		1 litre	**9979 06**	
		5litres	**9979 07**	
CITROEN hydraulic circuit fluid				
All countries	**Mineral fluid for hydraulic circuit – green colour**			
	TOTAL LHM PLUS **Norms ISO 7308-7309**	**Packs**	**CITROEN Reference**	
		1 litre	**ZCP 830 095**	
	Hydraulic circuit rinsing fluid – green colour			
	TOTAL HYDRAURINCAGE			

ALL TYPES	LUBRICANTS - TOTAL recommended oils			
Wash / wipe fluid				
		CITROEN Reference		
All countries	Concentrate : 250 ml	**9980 33**	**ZC 9875 953 U**	**9980 56**
	Liquid ready to use : 1 litre	**9980 06**	**ZC 9875 784 U**	
	Liquid ready to use : 5 litres	**9980 05**	**ZC 9885 077 U**	**ZC 9875 279 U**
Grease				
All countries			**Norms NLGI (1)**	
	TOTAL MULTIS EP2		**2**	
	TOTAL MULTIS COMPLEX EP2		**2**	
	TOTAL MULTIS N4128		**1**	
	TOTAL SMALL MECHANISMS			

(1) NLGI = National Lubrificating Grease Institute.

ENGINE OIL CONSUMPTION	ALL TYPES

I - Oil consumption depends on :
- the engine type.
- how run-in or worn it is.
- the type of oil used.
- the driving conditions.

II - An engine can be considered **RUN-IN** after:
- **3,000 miles** (5,000 km) for a **PETROL** engine.
- **6,000 miles** (10,000 km) for a **DIESEL** engine.

III - MAXIMUM PERMISSIBLE oil consumption for a **RUN-IN** engine.
- **0.5 litres** per **600 miles** (1,000 km) for a **PETROL** engine
- **1 litre** per **600 miles** (1,000 km) for a **DIESEL** engine.

DO NOT WORK BELOW THESE VALUES.

IV - OIL LEVEL : The level should **NEVER** be above the **MAX.** mark on the dipstick after changing or topping up the oil.
- This excess oil will be used up rapidly.
- It will reduce the engine output and adversely affect the operation of the air circuits and gas recycling.

ALL TYPES	ENGINE SPECIFICATIONS				
	Engines : BFZ BFX LFX LFY				
	Petrol				
	All Types				
	1.6i	1.8 i		1.8 i 16 V	
					Dual fuel
Engine type	**BFZ**	**BFX**	**LFX**	**LFY**	**LFY/GPL**
Cubic capacity (cc)	1580	1761			
Bore / Stroke	83/73	83/81.4			
Compression ratio	9.25/1	9.5/1		10.4/1	
Power ISO or EEC KW-rpm	65-6000	66-5000		81-5500	79-5500
Power DIN (HP-rpm)	89-6000	90-5000		112-5500	109-5500
Torque ISO or EEC (m.daN-rpm)	13-2600	14.7-2600		15.5-4250	
Torque DIN (mkg-rpm)	13.5-2600	15.3-2600		16.1-4250	
Max. speed (rpm)	6800	6300		6400	

ENGINE SPECIFICATIONS				ALL TYPES
	Engines : RGX RFN RFV XFZ			
	Petrol			
	2.0I TURBO CT	2.0i 16V		3.0i V6
Engine type	**RGX**	**RFN**	**RFV**	**XFZ**
Cubic capacity (cc)	1998	1997	1998	2946
Bore / Stroke	86/86	85/88	86/86	87/82.6
Compression ratio	7.9/1	10.8/1	10.4/1	10.5/1
Power ISO or EEC KW-rpm	108-5300	99-6000	97.4-5500	140-5750
Power DIN (HP-rpm)	150-5300	136-6000	135-5500	194-5750
Torque ISO or EEC (m.daN-rpm)	23.5-2500	19-4600	18-4200	26.7-4000
Torque DIN (mkg-rpm)	24.5-2500	19.8-4600	18.7-4200	27.7-4000
Max. speed (rpm)	6300		6800	6520

ALL TYPES	ENGINE SPECIFICATIONS					
	Engines : DHX - RHZ – RHY - RFW - P8C - THY					
	Diesel					
	All Types					
	1.9 TD	2.0 HDi		2.0 HDi 16V	2.1 TD	2.5 TD
Engine type	**DHX**	**RHZ**	**RHY**	**RHW**	**P8C**	**THY**
Cubic capacity (cc)	1905	1997			2088	2445
Bore / Stroke	83/88	85/88		85/88	95/92	92/92
Compression ratio	21.8/1	17.6/1		18/1	21.5/1	22/1
Power ISO or EEC KW-rpm	66-4000	80-4000	66-4000	80-4000	80-4300	94.5-4300
Power DIN (HP-rpm)	90-4000	110-4000	90-4000	110-4000	110-4300	130-4300
Torque ISO or EEC (m.daN-rpm)	19.6-2250	25-1750	20.5-1750	27-1750	25-2000	28.5-2000
Torque DIN (mkg-rpm)	20.5-2250	26-1750	21.3-1750	-1750	26-2000	30-2000
Max. speed (rpm)	4500	5300			4300	5100

COMPRESSION RATIO - DIESEL ENGINES | ALL TYPES

ENGINE	COMPRESSION RATIO	MINIMUM VALUE (- 20 ‰)	MAX. SPACING BETWEEN CYLINDERS
	in Bars		
XUD 7 / 9	25 to 30	20	5
XUD 11	19 to 21	15	
DW10	30 ± 5		
DK5	25 to 30	20	

XANTIA - XM	SPECIAL FEATURES - TIGHTENING TORQUES (m.daN)					
Engines : BFZ – BFX - LFX - LFY - RFV - RGX						
	CYLINDER HEAD (mm)					
Engine type	**BFZ**	**BFX**	**LFX**	**LFY**	**RFV**	**RGX**
Maximum permissible bow	0.05					
Gasket surface regrinding	- 0.20					
	TIGHTENING TORQUES (m.daN)					
Crankshaft bearing screws : **- Pre-tightening** **- Tightening** **- Angular tightening**	- 5.5 ± 0.5 -				- 7 ± 0.7 -	
Connecting rod screws **- Pre-tightening** **- Tightening** **- Angular tightening**	4±0.4 2±0.2 70°±7°					
Flywheel screw	5					
Crankshaft pulley screw	12					
Pulley screw at end of camshaft	5.5±0.5			7.5±0.7	5.5±0.5	

WARNING : After removing the crankshaft pulley, carry out the following operations :
- Clean the thread (Tap 14X150)
- Fit a NEW screw.
- Fit a NEW washer
- Tighten (see table above)

SPECIAL FEATURES - TIGHTENING TORQUES (m.daN)			SYNERGIE
	Engine : RFN		
Maximum permissible bow	**0.05**		
Gasket surface regrinding	**- 0.20**		
Crankshaft			
Bearing cap screws. - Pre-tightening - Angular tightening	2 ± 0.1 60° ± 6°	**Camshaft pulley hubs**	7.5 ± 0.7
Con-rod cap screws. - Tightening - Untightening - Tightening - Angular tightening	2.3 ± 0.2 46° + 2° - 4°	**Engine flywheel** - Pre-tightening - Tightening	2 ± 0.2 21° ± 3°
Con-rod nuts. - Pre-tightening - Angular tightening		**Clutch plate**	2 ± 0.2
Accessories drive pulley - Tightening - Angular tightening	2.1 ± 0.1		
Accessories drive pulley hub - Pre-tightening - Angular tightening *(Sintered washer)* - Angular tightening *(Steel washer)*	4 ± 0.4 40° ± 4° 53° ± 5°		

XANTIA - XM	SPECIAL FEATURES - TIGHTENING TORQUES (m.daN)

Engines : LFY - RFV

CYLINDER HEAD COVER

XM - XANTIA	
LFY - RFV	
- Pre-tighten : **0.5** - Tighten : **1±0.1**	

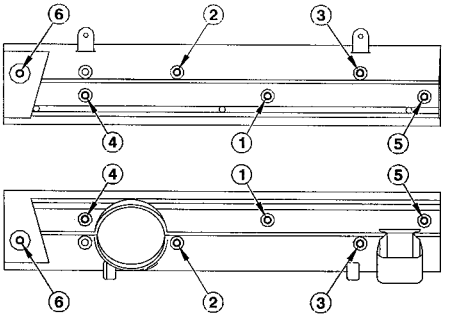

B1DP01YD

SPECIAL FEATURES - TIGHTENING TORQUES (m.daN)

XANTIA - XM - V6

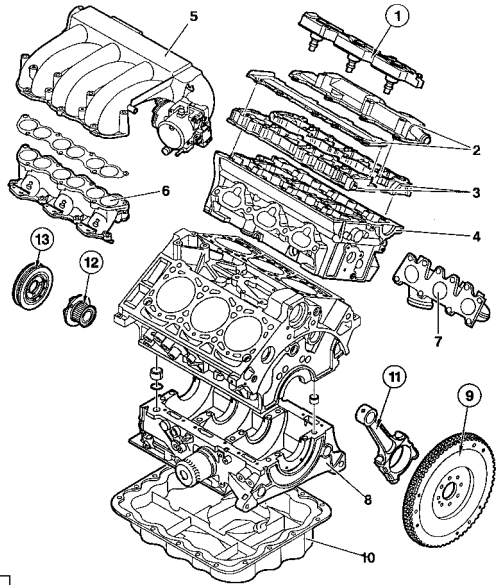

B1BP1HAP

Engine : XFZ

(1) Compact coil unit	**1 ± 0.1**
(**9)** Flywheel	
- Tightening	**1**
- Angular tightening	**60°± 6°**
(11) Connecting rod caps	
- Tightening	**2 ±**
- Angular tightening	**74° ± 7**
(12) Crankshaft hub	
- Tightening	**4 ± 0.4**
- Angular tightening	**80° ± 8°**
(13) Crankshaft pulley	**2.5 ± 0.2**

XANTIA - XM - V6	SPECIAL FEATURES - TIGHTENING TORQUES (m.daN)

Engine : XFZ

- 2 Cylinder head cover (A) Front cyl. head - (B) Rear cyl. head

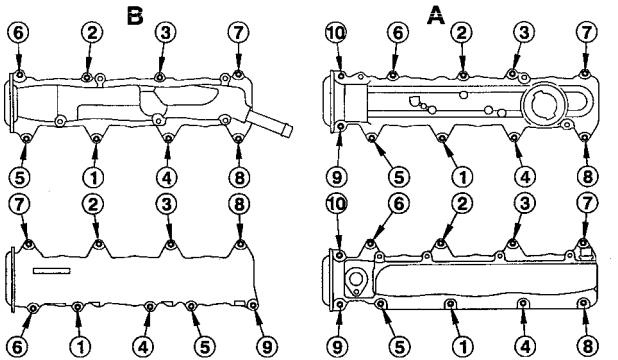

B1DP08UD

- 3 Bearing caps housing (A) Front cyl. head - (B) Rear cyl. head

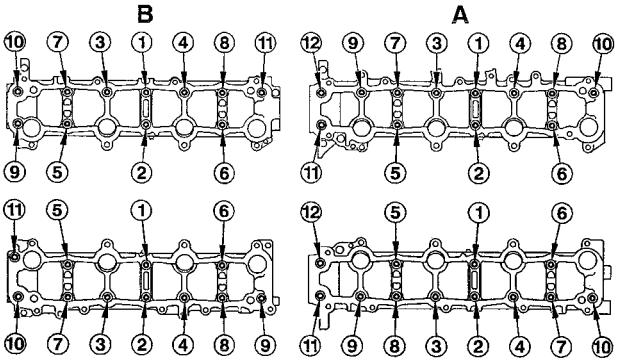

B1DP08TD

WARNING : Tighten screw by screw in the order shown.

- Pre-tighten	**0.5**	- Pre-tighten	**0.2**
- Tighten	**1 ± 0.1**	- Tighten	**0.8**

SPECIAL FEATURES - TIGHTENING TORQUES (m.daN)	XANTIA - XM - V6

Engine : XFZ

- 5 Air inlet manifold	- 6 Lower manifold (A) Front cyl. head - (B) Rear cyl. head
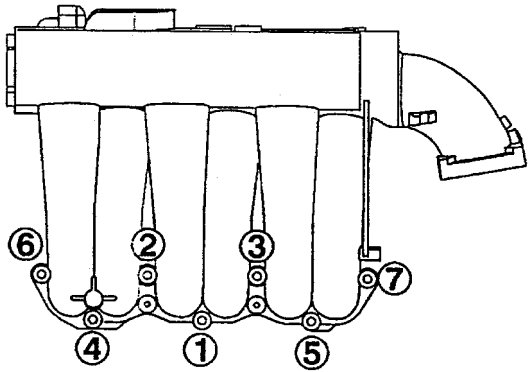 B1HPOLJC	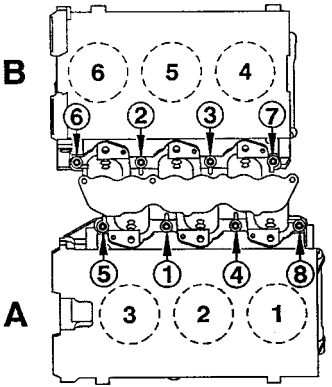 B1DP097C

WARNING : Tighten screw by screw in the order shown.

- Pre-tighten	**1 ± 0.1**	- Pre-tighten	**1 ± 0.1**
- Tighten	**2 ± 0.2**	- Tighten	**2.5 ± 0.2**

XANTIA - XM - V6	SPECIAL FEATURES - TIGHTENING TORQUES (m.daN)

Engine : XFZ

- 7 Exhaust manifold (NEW seal)	- 10 Oil sump
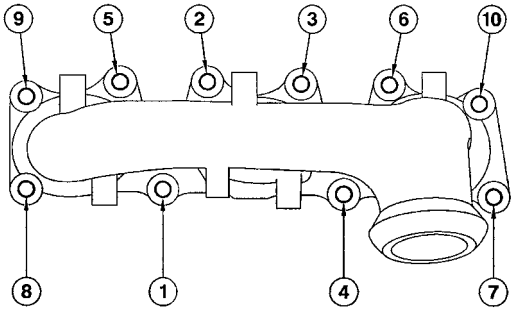 B1BP1GXD	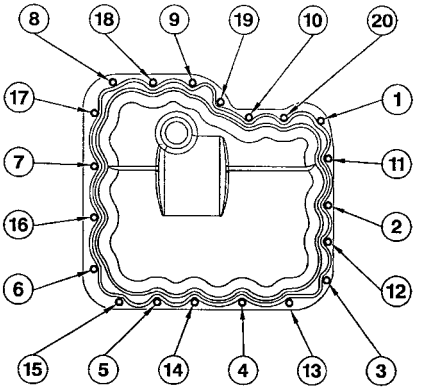 B1BP1GZD

WARNING : Tighten screw by screw in the order shown.

- Pre-tighten	**1 ± 0.1**	- Pre-tighten	**0.5 ±**
- Tighten	**3 ± 0.3**	- Tighten	**0.8 ±**

SPECIAL FEATURES - TIGHTENING TORQUES (m.daN)

XANTIA - XM - V6

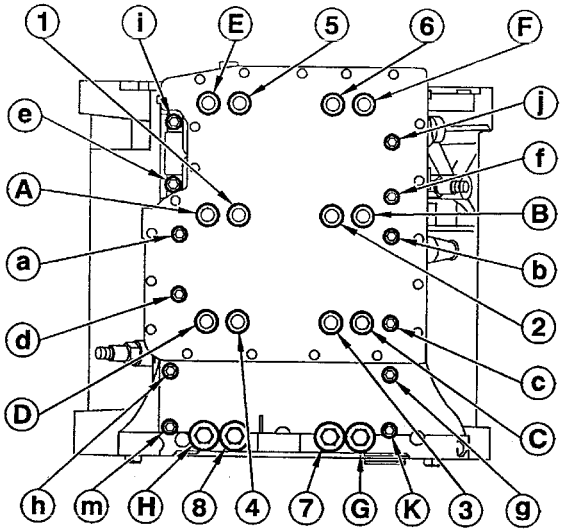

B1BP1GYD

Engine : XFZ

- 8 Crankshaft bearing

- Clean the threads of the screws with a brush.
- Refit the screws with a coating of grease (MOLYKOTE G RAPID PLUS).
- Check that the 8 centring pins are in place.

Maximum length under the heads of the screws :

- M11 = 131.5 mm.

- M8 = 119 mm.

- Pre-tighten the M11 screws to **3 m.daN ± 0,3** (1 to 8).
- Pre-tighten the M8 screws to **1 m.daN ± 0,1** (A to H).
- Tighten the M6 screws to **1 m.daN ± 0,1** (a to m).
- Slacken the M11 and M8 screws (screw by screw).
- Tighten the M11 screws to **3 m.daN ± 0,3** (1 to 8).
- Tighten the M8 screws to **1 m.daN ± 0,1** (A to H).

XANTIA - XM - V6	SPECIAL FEATURES - TIGHTENING TORQUES (m.daN)

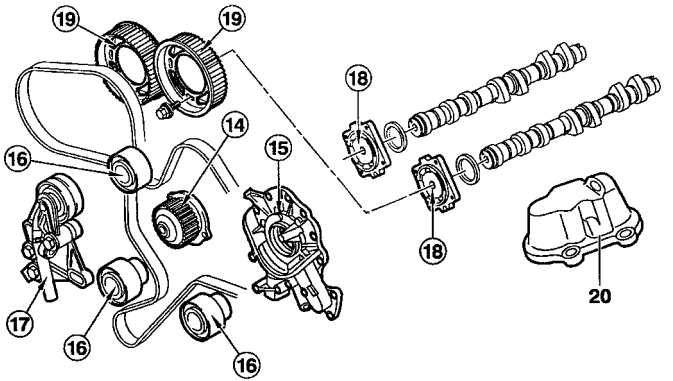

B1BP1HBD

Engine : XFZ

(14)	Water pump	
	- Pre-tighten	**0.5**
	- Tightening	**0.8**
(15)	Oil pump	
	- Pre-tighten	**0.5**
	- Tightening	**0.8**
(16)	Guide roller	**8 ± 0.8**
(17)	Tensioner roller	**8 ± 0.8**
(18)	Camshaft hubs	
	- Pre-tighten	**2 ± 0.2**
	- Tightening	**57° ± 5°**
(19)	Camshaft pulley	**1 ± 0.1**

SPECIAL FEATURES - TIGHTENING TORQUES (m.daN)	XANTIA - XM - V6

Engine : XFZ

- 20 Oil fumes recovery unit.

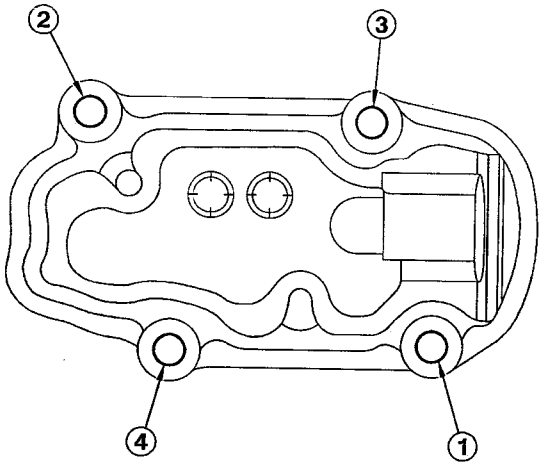

WARNING : Tighten screw by screw in the order shown.

- Pre-tighten **0.5 ±**

- Tightening **1 ± 0.1**

B1BP1H1D

DIESEL - All Types	SPECIAL FEATURES - TIGHTENING TORQUES (m.daN)					
	Engines : DHX - P8C - RHY - RHZ - RHW - THY					
	CYLINDER HEAD (mm)					
Engine type	**DHX**	**P8C**	**RHY**	**RHZ**	**RHW**	**THY**
Maximum permissible bow	0.07	0.05	0.03			0.05
Gasket surface regrinding	- 0.20		- 0.40			
	TIGHTENING TORQUES (m.daN)					
Crankshaft bearing screws : **- Pre-tightening** **- Tightening** **- Angular tightening**	1.5 ± 0.1 - 60° ± 6°		2.5 ± 0.2 - 60 ± 6°			2 ± 0.2 - 60°±6°
Connecting rod screws : **- Pre-tightening** **- Angular tightening**	2 ± 0.2 70° ± 7°					2 ± 0.2 65° ± 6°
Flywheel screw	5 ± 0.5					
Crankshaft pulley screw : **- Pre-tightening** **- Angular tightening**	4 ± 0.4 51° ± 5°	7 ± 0.7 60° ± 6°	4 ± 0.4 51° ± 5°			7 ± 0.7 51° ± 5°
Pulley screw at end of camshaft	4.5 ± 0.4	4.3 ± 0.4				

WARNING : After removing the crankshaft pulley, carry out the following operations : **(Except for THY engines).**

- Clean the thread (Tap 14X150)
- Fit a NEW washer
- Fit a NEW screw.
- Tighten (see table above)

CYLINDER HEAD — XANTIA - XM

Engines : BFZ – BFX - LFX - LFY - RGX - RFV

IDENTIFICATION OF THE CYLINDER HEAD GASKET

Engine types			BFZ	BFX	LFX	LFY	RGX	RFV
Identification marks			(Notch on cylinder head gasket) *					
Suppliers	CURTY	A	1					
		B	0					
		C	0					
		D	0					
		E	0					
	MEILLOR	A	0			0	0	1
		B	1			0	0	0
		C	0			1	0	1
		D	0			0	0	0
		E	0			0	1	0

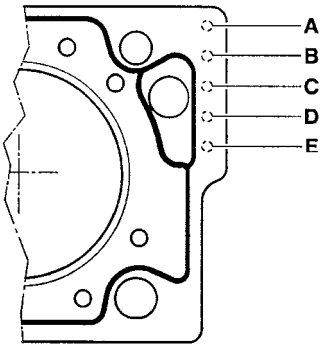

* 0 = Without notch
1 = One notch

B1BP004C

XANTIA - XM	CYLINDER HEAD (continued)

Engines : BFZ – BFX - LFX - LFY - RGX - RFV

Cylinder head tightening (m.daN)

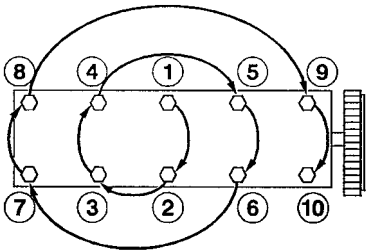

B1DP05BC

BFZ – BFX - LFX – LFY

- Pre-tightening	**6**
- Loosening	**YES**
- Tightening	**2**
- Angular tightening	**300°**

RGX – RFV

- Pre-tightening	**3.5**
- Loosening	**NO**
- Tightening	**7**
- Angular tightening	**160°**

Cylinder head bolts

Note : Oil the threads and under the heads of the cylinder head bolts. (Use engine oil or Molykote G Rapid Plus).

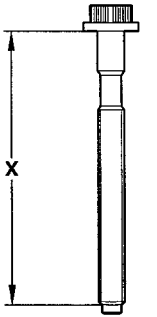

B1DP13PC

X = MAXIMUM reusable length

BFZ - BFX LFX	LFY	RGX	RFV
171.5 mm	**160.5 mm**	**122 mm**	**112 mm**

CYLINDER HEAD — SYNERGIE

Engine : RFN

Identification of the cylinder head gasket

	Nominal dimension	Repair dimension	
Marking zone "d"	4 - 5	2 - 4 - 5	
Marking zone "e"		R1	R2
Gasket thickness (mm)	0.8	1.1	1.4
Supplier	MEILLOR		

Multilayer metallic gasket

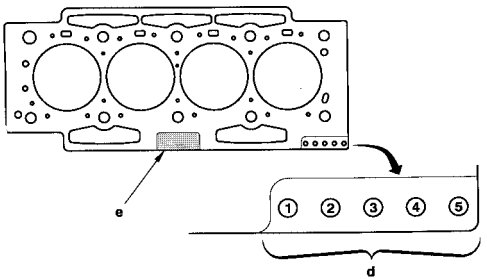

B1DP183D

SYNERGIE	CYLINDER HEAD (continued)

Engine : RFN

Cylinder head tightening (m.daN)

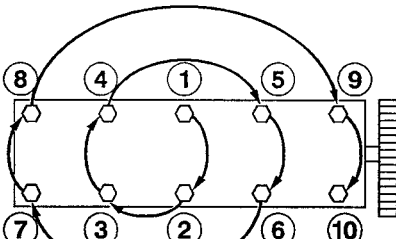

B1DP05BC

RFN

Pre-tightening	**1.5 ± 0.1**
Tightening	**5 ± 0.1**
Loosening	**360° ± 2°**
Tightening	**2 ± 0.75**
Angular tightening	**285° ± 5°**

Note : Oil the threads and under the heads of the cylinder head bolts. (Use engine oil or Molykote G Rapid Plus).

Cylinder head bolts

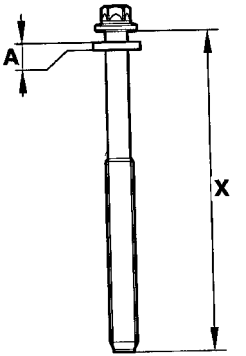

B1DP16FC

A = Washer thickness : **4 ± 0.2 mm**.
X = Length under heads of new bolts = **144.5 ± 0.5 mm**.

X = MAXIMUM reusable length
RFN
X = 147 mm

CYLINDER HEAD — XANTIA - XM

Engine : XFZ

IDENTIFICATION OF THE CYLINDER HEAD GASKET

Supplier	Thickness (mm)	Ident. marks (1) and (2)
ERLING	1.45 ± 0.04	Centre tab

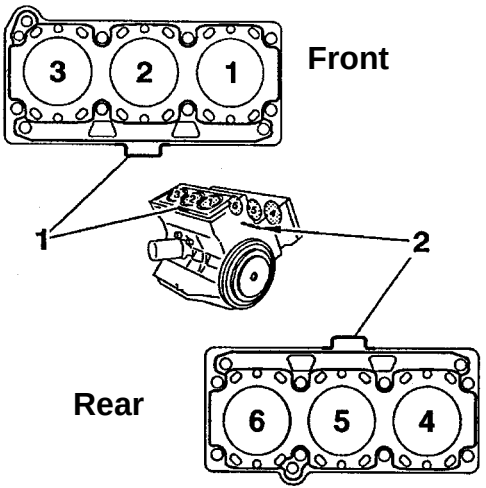

B1DP09TC

XANTIA - XM	CYLINDER HEAD (continued)

Engine : XFZ

Cylinder head tightening (m.daN)

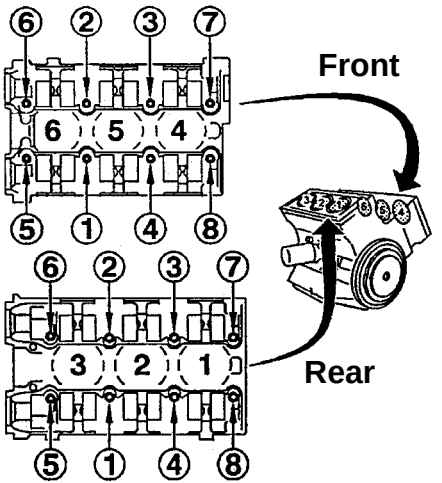

- Pre-tighten	2
- Loosen	YES
- Tightening	1.5
- Angular tightening	225°

B1DP09UC	B1DP09VC

Cylinder head bolt

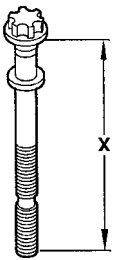

Note : Oil the threads and under the heads of the cylinder head bolts. (Use engine oil or Molykote G Rapid Plus).

X = MAXIMUM reusable length
XFZ
149.5 mm

CYLINDER HEAD — XANTIA

Engine : DHX

IDENTIFICATION OF THE CYLINDER HEAD GASKET

Engine type	Piston stand-proud (mm)	Thickness (mm) ± 0.06	Marking (B)
DHX	0.56 to 0.67	1.36	
	0.68 to 0.71	1.40	
	0.72 to 0.75	1.44	
	0.76 to 0.79	1.48	
	0.80 to 0.83	1.52	

(A) = Engine identification.

(B) = Thickness identification.

B1BP10TC

DHX

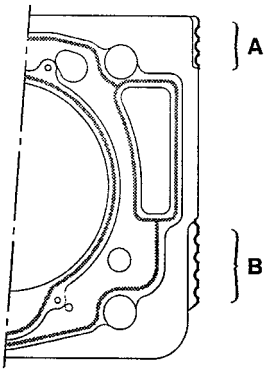

Engine	Ident. (A)	Ident. (B)
DHX	3 notches	1 to 5 notches

XM	CYLINDER HEAD (continued)

Engine : P8C

IDENTIFICATION OF THE CYLINDER HEAD GASKET

Engine type	Piston stand-proud (mm)	Thickness (mm)	Position of hole(s)	Ident.
P8C	0.65 to 0.76	1.52	B - A1	(A) and (B)
	0.77 to 0.81	1.57	B - A2	
	0.82 to 0.86	1.62	B - A3	
	0.87 to 0.91	1.67	B - A4	
	0.92 to 0.96	1.72	B - A5	
	Reconditioning		B - A1 - A5	

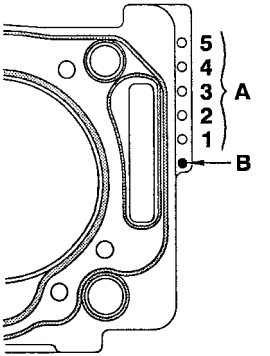

B1BP1DTC

CYLINDER HEAD

XANTIA - SYNERGIE

Engine : RHZ - RHY

IDENTIFICATION OF THE CYLINDER HEAD GASKET

Engine type	Piston stand-proud (mm)	Thickness (mm)	No. of notches at A
RHZ RHY	0.47 to 0.605	1.30 ± 0.06	1
	0.605 to 0.655	1.35 ± 0.06	2
	0.655 to 0.705	1.40 ± 0.06	3
	0.705 to 0.755	1.45 ± 0.06	4
	0.755 to 0.83	1.50 ± 0.06	5

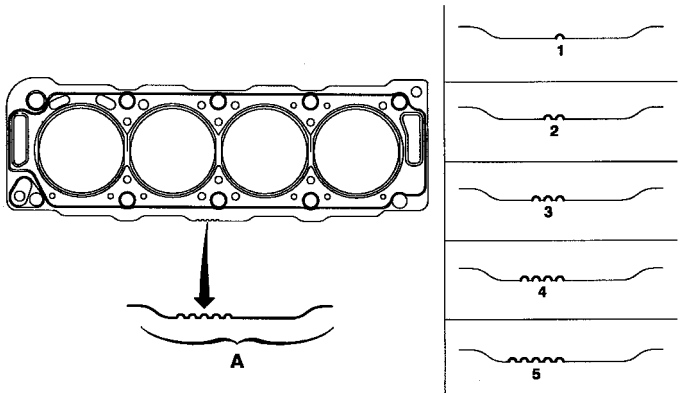

B1DP15AD

XANTIA - XM - SYNERGIE	CYLINDER HEAD

Engines : DHX - RHZ - RHY - P8C

Cylinder head tightening (m.daN)

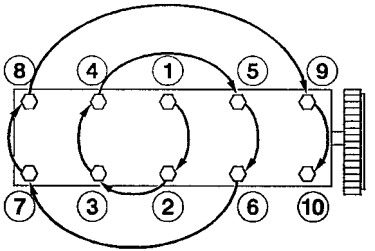

P8C

- Pre-tightening	**2**
- Tightening	**6**
- Angular tightening	**180°**

DHX - RHZ - RHY

- Pre-tightening	**2**
- Tightening	**6**
- Angular tightening	**220°**

B1DP05BC	B1DP13PC	B1DP15EC

Cylinder head bolts

DHX - P8C

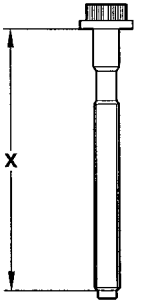

RHZ - RHY

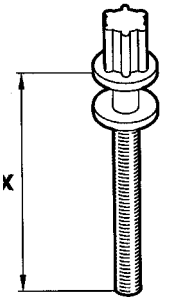

Note : Oil the threads and under the heads of the cylinder head bolts. (Use engine oil or Molykote G Rapid Plus).

X = MAXIMUM reusable length

DHX	P8C	RHZ - RHY
150.5 mm	**151.5 mm**	**133.3 mm**

CYLINDER HEAD

XM

Engine : THY

Identification of the cylinder head gasket

Engine type	Thickness (mm)	Ident.
THY	1.6	None

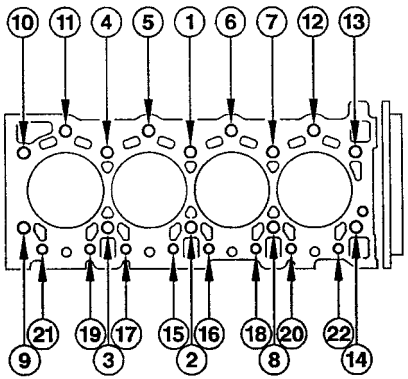

Cylinder head tightening (m.daN)

Pre-tightening the bolts :

- 1 à 14	(Bolt Ø 12)	**5**
- 15 à 22	(Bolt Ø 10)	**3.5**

Angular tightening :

- 1 à 22	(Bolt Ø 12 and 10)	**120° ± 5°**

B1DP03XC

Cylinder head bolts

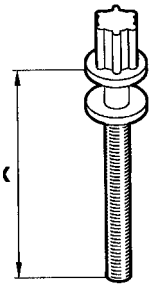

Note : Oil the threads and under the heads of the cylinder head bolts. (Use engine oil or Molykote G Rapid Plus).

B1DP15EC

X = MAXIMUM reusable length

Bolt Ø 12	Bolt Ø 10
153.5 mm	162.5 mm

ALL TYPES	BELT TENSION/SEEM UNITS CORRESPONDENCE TABLE	
↓ **4099-T** (C.TRONIC.105)	← **Tools** →	**4122-T** (C.TRONIC.105.5) ↓

TYPE DE COURROIES / 1 daN = 1 Kg / daN	5	10	15	20	25	30	35	40	45	50	55	60	65	70	75	80	85	90	95	100
S	18	28	36	44	51	58	64	70	76	82	88	94	100	106	112					
S	18	28	36	44	51	58	64	70	76	82	88	94	100	106	112					
P E5	18	23	27	31	34	37	40	43	46	49	52	54	56	58	60	62	64	66	68	
P E6	25	32	39	45	50	54	58	62	66	70	74	78	81	84	86	88	89	90	91	
P E6	32	41	48	55	62	69	76	83	90	96	102	108	114	120	126	132	138	144	150	
P E6	27	36	43	49	55	61	66	71	76	80	84									
P E6	32	41	49	57	63	69	75	81	87	93	99									
P E6	26	35	42	48	53	58	63	68	73	78	82									
P E6	30	40	47	54	61	68	75	81	87	93	99									
P E7	45	55	65	74	83	89	95	101	107	113	119									
P E7	36	49	52	64	73	80	86	92	98	104	110									
T E7	28	34	39	44	48	52	56	60	64	68	71									
T E7	34	41	48	55	62	69	76	83	89	96	102									
T E8	32	39	45	51	56	61	66	71	76	79	81									
T E8	37	43	51	59	66	73	80	86	92	98	104									
T E9	52	60	67	74	81	88	94	100	106	110	114									
T E9	49	57	63	69	75	81	87	93	99	105	111									

B1EP135D

AUXILIARY EQUIPMENT DRIVE BELT | ALL TYPES

Engines : All Types Petrol and Diesel

TOOL

- Belt tension measuring instrument : **4122 - T.** (C.TRONIC 105.5)

- **WARNING : If using tool 4099-T** (C.TRONIC 105) refer to the correspondence table on page 62.

ESSENTIAL

- Before refitting the auxiliary equipment drive belt, check that :

1) The roller(s) rotate freely (no play or stiffness)

2) The belt is correctly engaged in the grooves of the various pulleys.

XANTIA - XM	AUXILIARY EQUIPMENT DRIVE BELT

Engines : BFZ - LFX - LFY - RFV - RGX

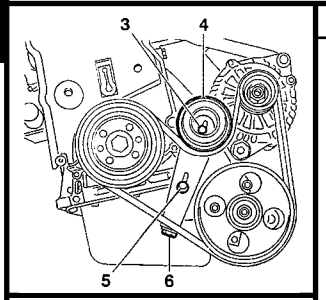

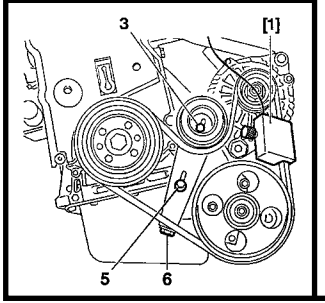

Without air conditioning

[1] Belt tension measuring instrument : **4122-T**

- (3) and **(5)** Roller support fixing screws.

- (6) Tensioning screw.

- Tighten the belt, by loosening the screw **(6)** to : In **SEEM units**

BFZ-LFX	LFY	RFV-RGX
100 ± 10	**120 ± 10**	**100 ± 10**

- Tighten the screws **(3)** and **(5)**.
- Rotate the crankshaft by **4 turns** (direction of rotation).
- Loosen the screws (3) and **(5)**.
- Tension the belt, by slackening the screws **(6)** to : In **SEEM units**.

BFZ-LFX	LFY	RFV-RGX
115 ± 5	**120 ± 10**	**105 ± 10**

- Tighten the screws **(3)** and **(5)** to **2 m.daN.**

B1BP00HC B1BP00IC

AUXILIARY EQUIPMENT DRIVE BELT

Engines : BFZ - LFX - LFY - RFV - RGX (Continued)

With air conditioning

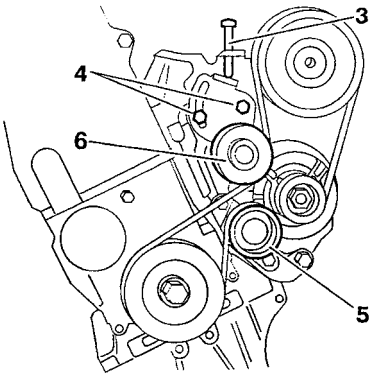

B1EP05FC

- Loosen :
- The screws **(4)** of the tensioner roller (**13 mm** angle spanner).
- The screw **(3)**.

- Tension the belt using the screw **(3)** to obtain :
- New belt : **120 SEEM units**.
- Reused belt : **90 SEEM units**.

- Tighten the screws **(4)** to **2 m.daN**.

- Rotate the crankshaft by **4 turns** (direction of rotation).

- Adjust the belt tension (if necessary).

XANTIA - XM	AUXILIARY EQUIPMENT DRIVE BELT

Engines : BFZ - LFX - LFY - RFV - RGX (Continued)

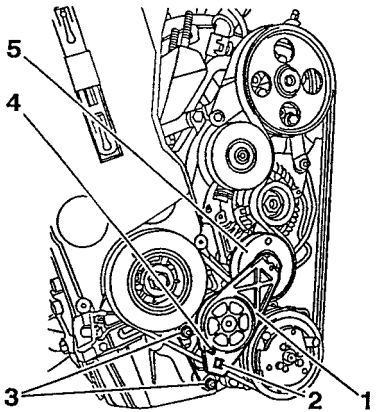

B1BP1HJC

With air conditioning

- Fit the drive belt.

- The tensioner roller **(1)**.

- Tighten the screws **(3)** to **2 m.daN**.

- Turn the tensioner roller **(1)** using the tool (**9.52 mm square drive (3/8)**) at **(2)**, in order to remove the tool or locking peg **(Ø 4 mm)** at **(4)**.

- Slowly release the tensioner roller **(1)** so that the roller **(5)** presses against the belt

AUXILIARY EQUIPMENT DRIVE BELT

SYNERGIE

Without air conditioning

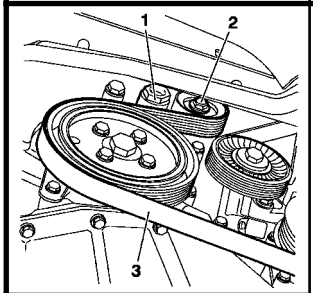

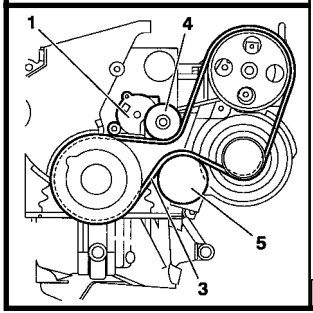

Engine : RFN

Tools

[1] Plyers for removing plastic pegs **7504-T**

Remove the belt.
- Detension the belt **(3)** by turning the screw **(2)** of the tensioner roller **(1)** *(anti-clockwise).*

- The screw **(2)** *(**WARNING** : not left hand screw).*
- Remove the belt **(3)**, while keeping the tensioner roller **(1)** tight.

Refit the belt.
- Refit the belt **(3)**, while keeping the tensioner roller **(1)** tight.
- Release the tensioner roller **(1)**.

B1BP23PC | B1BP23QC

B1BP23PC | B1BP23RC

With air conditioning

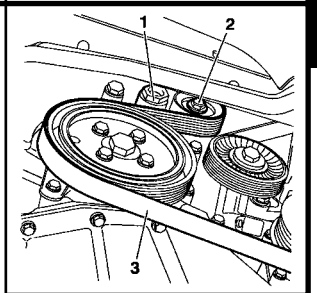

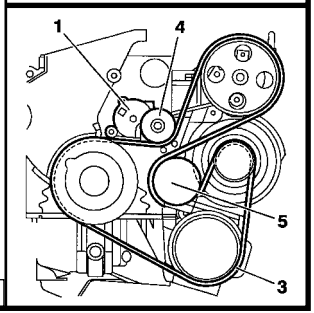

XANTIA - XM	AUXILIARY EQUIPMENT DRIVE BELT

Engine : XFZ

With air conditioning

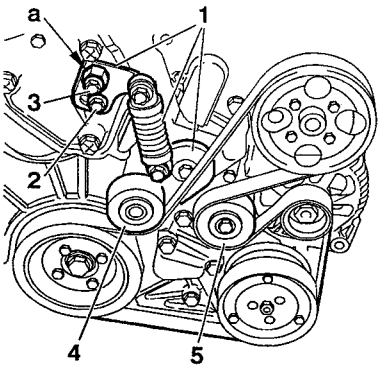

B1BP1EXC

Removal :

- Release the bolt **(3)**.
- Keep the dynamic tensioner **(1)** tensioned by holding the hexagonal fixture «a».
- Release the shoulder of the screw **(2)** from the oblong hole of the dynamic tensioner.
- Release the dynamic tensioner **(1)** using the hexagonal fixture **«a»**.
- Remove the belt.

Refitting :

- Locate the dynamic tensioner **(1)** in its operating position using the hexagonal fixture **«a»**.

(The tensioner **(1)** will automatically tension it).

- Tighten the screws **(2)** and **(3)** to **2.5 m.daN**.

AUXILIARY EQUIPMENT DRIVE BELT

XANTIA - XM

Engines : DHX - P8C

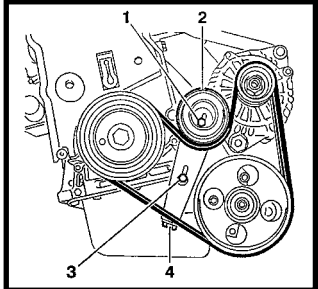

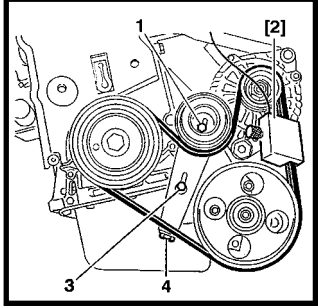

Without air conditioning

[2] Belt tension measuring instrument **4122-T**

- Tighten the belt, by loosening the screw **(4)** to obtain:

- **115 ± 10 SEEM units.**

- Tighten the screws **(1)** and **(3)**.

- Rotate the crankshaft by **4 turns** (Direction of rotation).

- Loosen the screws **(1)** and **(3)**.

- Tighten the belt to :

- **115 ± 10 SEEM units** (if necessary).

- Tighten the screws **(1)** and **(3)** to **2 m.daN.**

B1BP10GC | **B1BP10HC**

XANTIA	AUXILIARY EQUIPMENT DRIVE BELT

Engines : DHX

With air conditioning

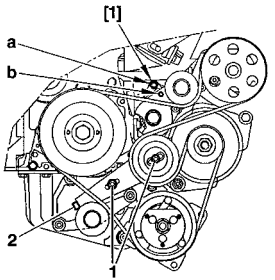

- Loosen the screws **(1)**.

- Tighten or loosen the screw **(2)** until holes **«a»** and **«b»** are superimposed.

- Locate the peg **[1]** : (in the hole **«a»**).

DHX peg **7019-T.**

- Tighten the screw **(2)** until it stops..

- Loosen the screw **(2)**, so the peg **[1]** can be removed.

- Tighten the screws **(1)** to **2 m.daN**.

B1BP1HHC

AUXILIARY EQUIPMENT DRIVE BELT

XM

Engines : P8C

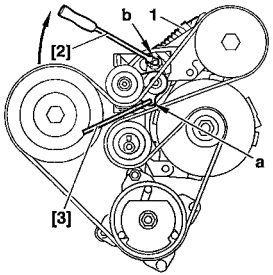

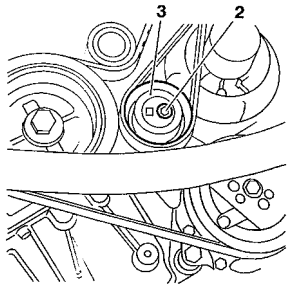

With air conditioning

- Engage the square drive tool **[2] (9.52 mm - 3/8)**, in its location in the tensioner arm **(b)**.
- Compress the damper **(1)** using the tool **[2]**.
- Peg the damper **(1)** at **«a»** using the tool **[3] 7019- T**.

(Tensioner in locking position).

- Remove the tool **[2]** and loosen the screw **(2)** of the roller **(3)**.
- Position the belt on :

The crankshaft, the tensioner roller, the high pressure pump, the eccentric roller, the air conditioning compressor.

- Tighten the belt, roller **(3)** tool **[4] 5711- T.E**.

NOTE : Tighten the screw **(2)** of the roller **(3)** when the tool **[3]** slides freely into its pegging location.

- Tighten the screw **(2)** to **5 m.daN**.

B1BP1HFC | B1BP1HEC | B1BP1HDC | B1BP1HCC

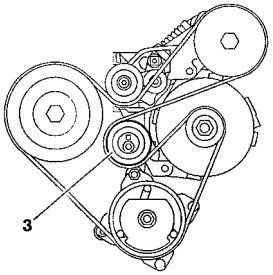

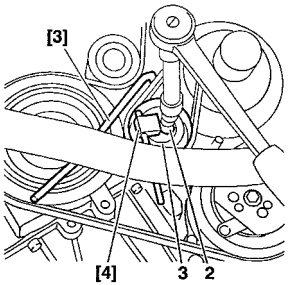

XANTIA - SYNERGIE	AUXILIARY EQUIPMENT DRIVE BELT

Engine : RHY - RHZ

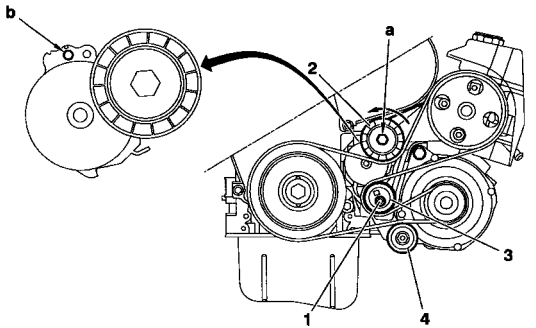

Without air conditioning

Tools

[1] Belt tension adjusting square	: **(-).0188 J2**
[2] Ø 4 mm peg	: **(-).0188.Q1**
[3] Ø 2 mm peg	: **(-).0188.Q2**
[4] Dynamic tensioner compression lever	: **(-).0188.Z**

Removal.
Re-use of belt

WARNING : Mark the direction the belt was fiited in case of re-use of the same belt.

- Compress the tensioner roller **(2)** by action at **«a»** (in anti-clockwise direction), tool **[4]**.
- Keep the tensioner roller **(2)** compressed and remove the belt.

No re-use of belt.
- Compress the tensioner roller **(2)** by action at **«a»** (in anti-clockwise direction), tool **[4]**.
- Peg using tool **[2]**, at **«b»**.
- Hold the tensioner roller **(2)** compress and remove the belt.
- Loosen the screw **(1)**.

B1BP1YKD

AUXILIARY EQUIPMENT DRIVE BELT

Engine : RHY - RHZ

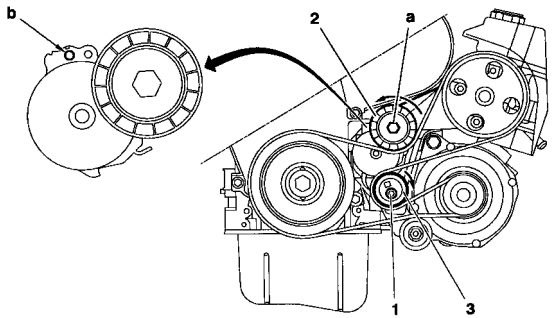

Without air conditioning (continued)

Refit.
Re-used belt.

- Compress the tensioner roller **(2)** by action at **«a»** (in anti-clockwise direction), tool **[4]**.
- Refit the belt.

WARNING : Respect the direction belt was fitted.

- Remove the tool **[4].**

New belt.

- Refit the belt.
- Turn the eccentric roller **(3)**, tool **[1]** (clockwise) to free the tool **[2]** from its pegging at **«b»**.
  - Hold the eccentric roller **(3)**, tool **[1]**, and tighten the screw **(1)** to **4.3 m.daN**.
  - Remove the tool **[2]**.
  - Rotate the crankshaft **4 times** in the direction of rotation.
  - Check that it is possible to peg at **«b»**, tool **[3]**.
  - If not possible to peg, restart the adjustment.

B1BP1YMD

XANTIA - SYNERGIE	AUXILIARY EQUIPMENT DRIVE BELT

Engine : RHY - RHZ

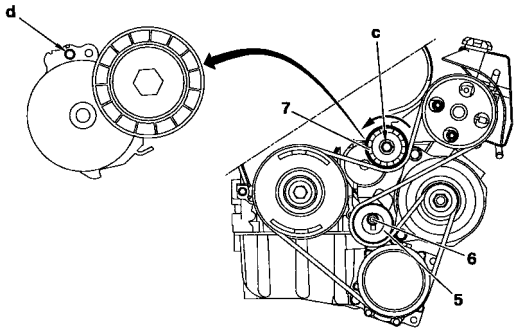

With air conditioning

Tools

[1] Belt tension adjusting square	: **(-).0188 J2**
[2] Ø 4 mm peg	: **(-).0188.Q1**
[3] Ø 2 mm peg	: **(-).0188.Q2**
[4] Dynamic tensioner compression lever	: **(-).0188.Z**

Remove

Re-use of belt

WARNING : Mark the direction the belt was fitted in case of re-use of the same belt.

- Compress the tensioner roller **(7)** by moving it at **«c»** (in anti-clockwise direction), tool **[4]**.
- Hold the tensioner roller **(7)** compressed and remove the belt.

No re-use of belt.

- Compress the tensioner roller **(7)** by moving it at **«c»** (in anti-clockwise direction), tool **[4]**.
- Peg using tool **[2]**, at **«d»**.
- Loosen the screw **(6)**.
- Bring the eccentric roller **(5)** towards the rear.
- Tighten the screw **(6)** by hand.
- Remove the belt.

B1BP1YLD

AUXILIARY EQUIPMENT DRIVE BELT

Engine : RHY - RHZ

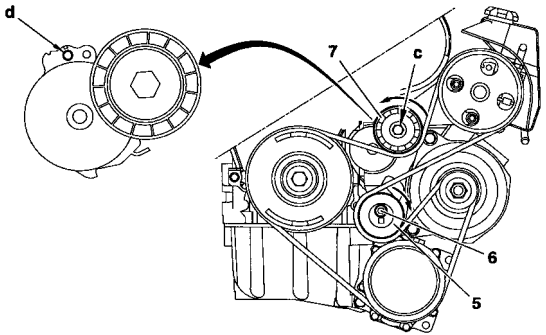

With air conditioning (continued)

Refit.

Re-used belt.
- Compress the tensioner roller **(7)** by action at **«c»** (in anti-clockwise direction), tool **[4]**.
- Refit the belt.

WARNING : Respect the direction belt was fitted.
Remove the tool **[4]**.

New belt.
- Refit the belt.
- Turn the eccentric roller **(5)**, tool **[1]** (clockwise) to free the tool **[2]** from its pegging at **«d»**.
- Hold the eccentric roller **(5)**, tool **[1]**, and tighten the screw **(6)** to **4.3 m.daN**.
- Remove the tool **[2]**.
- Rotate the crankshaft **4 times** in the direction of rotation.
- Check that it is possible to peg at **«d»**, tool **[3]**.
- If not possible to peg, restart the adjustment.

B1BP1YND

XM	AUXILIARY EQUIPMENT DRIVE BELT

Engine : THY

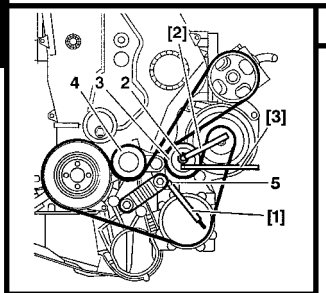

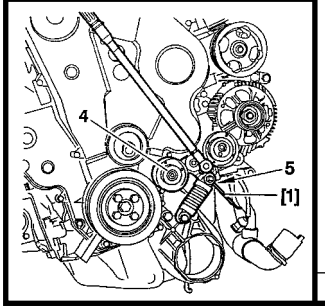

With air conditioning

WORN BELT.

- Loosen the screw **(2)** using tool **[2] 5714-T.R** (**6 mm** across the flats).

- Move the roller **(3)**, using tool **[3] 5714-T.S** (**6 mm** across the flats) until tool **[1] 5714 - T.Q**. **(Ø 4 mm)** fits in the hole **(5)** of the automatic tensioner **(4)**.

NOTE :If there is insufficient roller movement **(3)**, move the tensioner **(4)** using a ratchet wrench **(9.52 mm)** plus extension, so that the tool **[1] (Ø 4 mm)** fits in the hole **(5)**.

- Remove the belt.

BROKEN BELT.

- Move the tensioner **(4)** using a ratchet wrench **(9.52 mm)** plus extension so that the tool **[1] 5714-T.Q (Ø 4 mm)** fits in the hole **(5)**.

B1BP051C	B1BP052C

AUXILIARY EQUIPMENT DRIVE BELT

XM

Engine : THY

With air conditioning (continued)

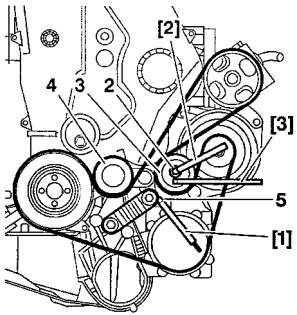

B1BP051C

NEW BELT.

- ove the roller **(3)**, with tool **[3] 5714-T.S** (**6 mm** across the flats) until tool **[1] 5714-T.Q (Ø 4 mm)** is released.
- Hold the roller **(3)** in this position and tighten the screw **(2)** using tool **[2]**. Tighten to **3.2 m.daN**.
- Rotate the crankshaft by **5 turns** (Direction of rotation) = **1 turn** of the belt.
- Check the tension by inserting the tool **[1] (Ø 2 mm)** in the hole **(5)** of the automatic tensioner **(4)**.
- If the tension is not correct, repeat the tensioning procedure.

XM	AUXILIARY EQUIPMENT DRIVE BELT

Engine : THY

With air conditioning (continued)

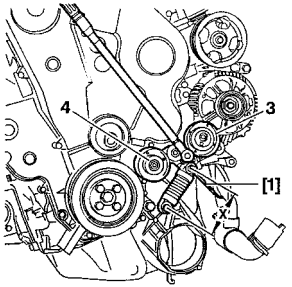

B1BP054C

REUSED BELT

- Continue in the same way as for a new belt.

NOTE : In certain cases the roller **(3)** is in its maximum stop position, and it is not possible to remove the tool **[1] 5714-T.Q (Ø 4 mm)** .

- Move the roller **(4)** using a ratchet wrench **(9.52 mm)** plus extension to release the tool **[1]**.

- Rotate the crankshaft by **5 turns** (Direction of rotation) = **1 turn** of the belt.

Measure distance X :

- If measurement **X** is less than **98 mm**, the belt is correctly tensioned.

- If measurement **X** is more than **98 mm**, the belt must be replaced.

BALANCE SHAFT BELT

XM

Engine : THY

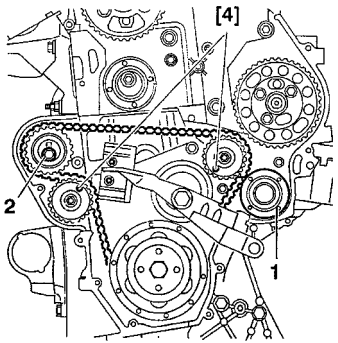

B1BP04QC

TOOLS

- **[5]** Belt tension measuring instrument	: **4122-T**	
- **[1]** Flywheel locating peg	: **7014-T.J.**	**Tool kit 7004-T**
- **[2]** Camshaft pinion locating peg	: **5711-T.A.**	**Tool kit 5711-T**
- **[3]** Injection pump peg	: **5711-T.B.**	
- **[4]** Balance shaft peg	: **5711-T.D.**	
- **[6]** Tensioning lever	: **5711-T.E.**	

Removal

- The auxiliary equipment and timing belt (See pages **76** to **78** and **115** to **117**).
- Peg the balance shafts using the tools **[4]**.
- Remove the guide roller **(1)**.
- Loosen the screw **(2)** (freeing the roller).
- Remove the balance shaft belt.

XM	BALANCE SHAFT BELT

Engine : THY (continued)

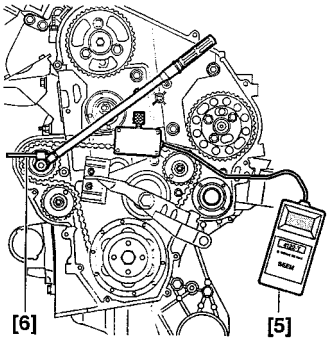

B1BP04RC

Refitting

- Check that the rollers work properly.
- The balance shaft belt.
- Remove the tool **[4]**.
- Fit the tool **[5]** to the belt.
- Pre-adjust the tension using the tool **[6]**. (Placed in the square locating hole of the tensioner roller).

Adjust the tension to :

- New belt **70 SEEM units**.
- Reused belt **51 SEEM units**.
- Tighten the roller to **4.5 m.daN**.

Checking the fitting pre-tensioning.

- Remove and refit the tool **[5]**. (Make any necessary corrections).

Fit :

- The guide roller **(1)**, tighten to **4.5 m.daN**.
- The timing belt (See pages **115** to **117**).
- Pre-tension, then tension the timing belt (See pages **115** to **117**).

BALANCE SHAFT BELT

DK5 - All Types

Engine : THY (continued)

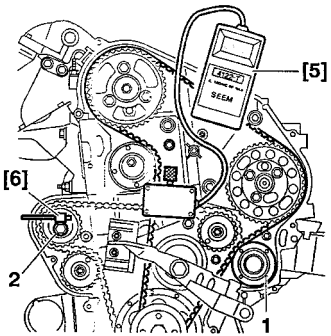

B1BP04SC

NOTE : Rotate the crankshaft by **10 turns** (if this wasn't carried ort when refitting the timing belt).
- Loosen the screw **(2)** to release the tensioner roller.
- Fit the tool **[5]**.
- Adjust the belt tension using the tool **[6]**. (Inserted in the square hole in the tensioner roller).

Adjust the tension to :
- New belt **31 SEEM units**.
- Reused belt **26 SEEM units**.
- Tighten the tensioner roller to **4.5 m.daN**.

CHECKING THE FITTING TENSION

- Remove and refit the tool **[5]**. (Make any necessary corrections).
- Remove the tool **[5]**.

CHECKS

- Rotate the crankshaft by **2 turns**.
- Peg the flywheel, (behind the engine) using the tool **[1]**.
- To check that a tooth hasn't been missed, visually check the pegging of the following components :
- the injection pump.
- the camshaft.
- the balance shafts.
- Remove the tool **[1]**.

XM	WATER PUMP BELT

Engine : THY

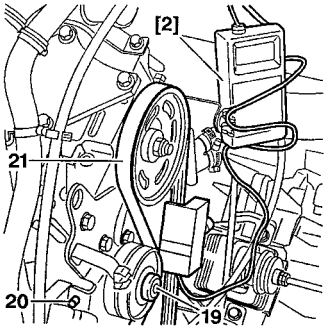

B1GP016C

Removal

- Loosen the screw **(19)**.
- Turn the screw **(20)** in the same direction as if tightening in order to slacken the belt.
- Remove the belt **(21)**.

Refitting

- Refit the belt **(21)**.
- Fit the measuring instrument **[2] 4122-T** to the belt.
- Loosen the screw **(20)** to tighten the belt.
- **NEW belt = 46 SEEM units.**
- **Reused belt = 38 SEEM units.**
- Remove the tool **[2]**.
- Rotate the crankshaft by **3 turns** (direction of rotation).
- Fit the tool **[2]**.
- Check the belt tension:
- **NEW belt = 46 SEEM units.**
- **Reused belt = 38 SEEM units.**
- Retighten the screw **(19)**.
- Remove the tool **[2]**.

CHECKING AND SETTING THE VALVE TIMING									ALL TYPES
	XU							EW	ES
	5	7			10				9
	JP	JB	JP	JP4	J2TE	J4R		J4	
	1.6 i	1.8 i	1.8 i 16 V		2.0 i Turbo CT	2.0 i 16 V			3.0 i
Engine type	**BFZ**	**LFX**	**LFY → 11/97**	**LFY 11/97 →**	**RGX**	**RFV → 11/97**	**RFV 11/97 →**	**RFN**	**XFZ**
XANTIA	X	X	X	X		X	X		X
XM					X	X	X		X
SYNERGIE								X	
See pages :	85 to 86		87 to 91	82 to 96	85 to 86	87 to 91	92 to 96	97 to 101	102 to 106

ALL TYPES	CHECKING AND SETTING THE VALVE TIMING (continued)					
	XUD	DW			XUD	DK
	9	10			11	5
	BTF	TD	ATED	ATED4	BTE	ATE
	1.9 TD	2.0 HDi		2.0 HDi 16V	2.1 TD	2.5 TD
Engine type	**DHX**	**RHY**	**RHZ**	**RHW**	**P8C**	**THY**
XANTIA	X	X	X			
XM					X	X
SYNERGIE			X	X		
See pages :	107	108 to 112			113 to 114	115 to 117

CHECKING AND SETTING THE VALVE TIMING

Engine : BFZ - LFX - RGX

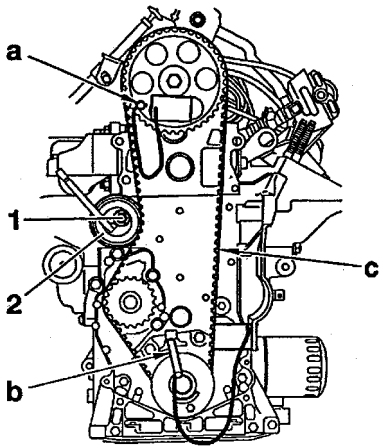

B1EP07RC

TOOLS

- Belt tension measuring instrument : **4099-T** or **4122-T**
- Camshaft pulley locating peg : **7004-T.G.**
- Crankshaft locating peg : **7014-T.N.**
- Square drive : **7017-T.W.**

} **Tool kit 7004-T**

CHECKING THE VALVE TIMING

- Remove the protective covers.
- Peg the camshaft pulley at **«a»** using the tool **7004 - T.G**.
- Peg the crankshaft at **«b»** using the tool **7014 - T.N**.

SETTING THE VALVE TIMING

- Check that the pegs can be engaged correctly at **«a»** and **«b»**.
- Fit the belt in the following order : camshaft pulley, crankshaft pinion, water pump pinion, tensioner roller.
- Peg the camshaft pulley at **«a»** and the crankshaft at **«b»**.
- Remove the peg at **«b»** only.
- Bring the tensioner roller **(2)** into contact with the belt.

CHECKING AND SETTING THE VALVE TIMING

Engines : BFZ - LFX - RGX (continued)

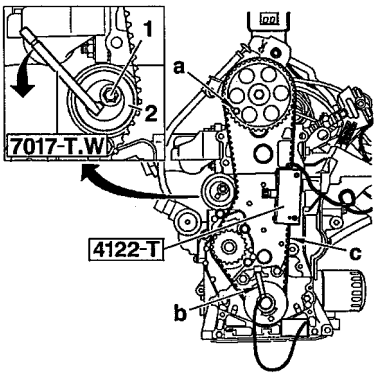

B1EP07SC

SETTING THE VALVE TIMING

- Fit the tension measuring tool to the middle of the belt strip **«c»**.
- Turn the tensioner roller **(2)** *(anti-clockwise direction)* using the tool **7017-T.W** to obtain the following measurements :
- Engines : **LFZ - LFW : 30 ± 2 SEEM units**.
- Engines : **RGX - RFU : 16 ± 2 SEEM units**.
- Tighten the screw **(1)** to **2m.daN**.
- Remove the tools.
- Rotate the crankshaft by two turns *(do not turn backwards)*.
- Check the setting by positioning the pegs at **«a»** and **«b»**.
- Remove the pegs.

CHECKING THE TENSION

- Rotate the crankshaft by two turns *(do not turn backwards)*.
- Peg the camshaft pulley at **«a»**.
- Fit the tension measuring tool on the belt strip at **«c»**.
- The tension measurement should be **44 ± 2 SEEM units**.
  (If the measurement is not correct, repeat the tensioning procedure).
- Remove the tools.

CHECKING AND SETTING THE VALVE TIMING

Engine : LFY - RFV ➔ 11/97

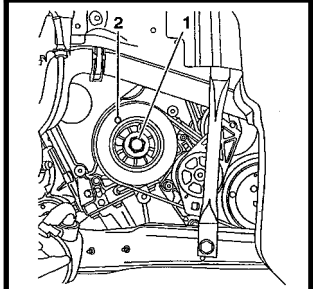

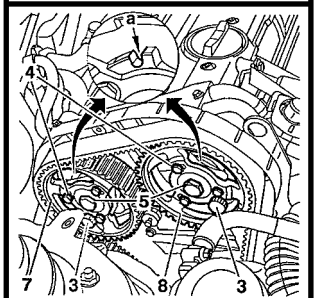

TOOLS

- Belt tension measuring instrument.	: **4099-T** or **4122-T**	
- Crankshaft locating peg	: **7014-T.N.**	
- Camshaft pulley locating peg.	: **9041-T.Z.**	**Tool kit 7004-T**
- Tensioning tool	: **7017-T.W.**	
- Toothed sector for locking the flywheel **XM**	: **6012-T**	
- Toothed sector for locking the flywheel **XANTIA**	: **9044-T**	

CHECKING THE SETTING

- Turn the engine by the crankshaft screw **(1)**.
- Ensure that the slot **(a)** for pegging the camshaft hubs can be seen *(Conformity of hubs).*
- Turn the engine by the screw **(1)** and peg the crankshaft at **(2)**.

ESSENTIAL : Check that the crankshaft DAMPERS pulley is in good condition.
If the hub/pulley markings do not line up, the crankshaft pulley must be replaced.

- Peg the camshaft pulleys at **(3)**. *(The locating pegs should slide in easily).*

If this is not the case :

- Check that the crankshaft pegs can be engaged correctly.
-Slacken the six screws **(4)** of pulleys **(7)** and **(8)**.
-Peg the hubs at **(3)**. *(If necessary, turn the camshaft by the screw **(5)**).*
-Tighten the screws **(4)** to **1 m.daN**.
-Remove the pegs.

B1EP08JC	B1EP08KC

CHECKING AND SETTING THE VALVE TIMING

Engines : LFY - RFV → 11/97 (continued)

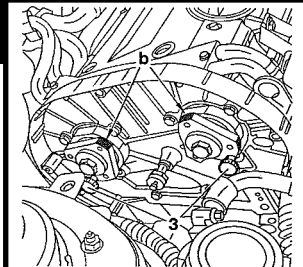

LFY

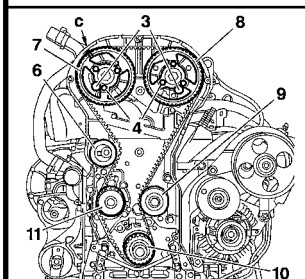

SETTING THE VALVE TIMING

- Peg the crankshaft at **(2)**.
- Peg the camshaft pulleys at **(3)**.
- Loosen the tensioner roller **(6)**.
- Remove the belt..

PREPARATION

- Loosen the three screws **(4)** of pulleys **(7)** and **(8)**.
- Ensure that the pulleys **(7)** and **(8)** move freely on the hubs.

If this is not the case :

- Remove the pulleys **(7)** and **(8)**.
- Clean the contact faces of pulleys **(7)** and **(8)** and of the camshaft hubs at **(b)**.
- Fit the pulleys **(7)** and **(8)** onto the hubs, without tightening them.

NOTE : Pulleys **(7)** and **(8)** are identical.

(Timing angles, see pages: 118 **(LFY)** - 119 **(RFV)**

LFY and **RFV** engines = The camshaft hubs are different.

REFITTING THE TIMING BELT

- Fit the belt on the pulley **(7)**.
- Fit a plastic clamping collar **(c)** to hold it in place.
- Wind the belt around the : pulley **(8)**, roller **(9)**, pinion **(10)**, water pump **(11)** and tensioner roller **(6)**.

B1EP08LC | B1EP11UC

RFV

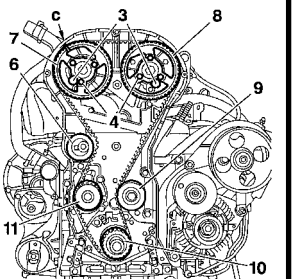

B1EP08UC

CHECKING AND SETTING THE VALVE TIMING

LFY | **Engines : LFY - RFV ➔ 11/97 (continued)** | **RFV**

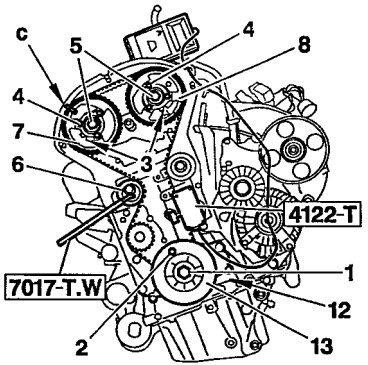

B1EP11VC

PRE-TENSIONING THE TIMING BELT

- Fit the tool **4122-T**.
- Turn the roller **(6)** with the tool **7017-T.W**.

Pre-tension to :

Engines	LFY - RFV
New belt	45 SEEM units

- Tighten the roller **(6) to 2 m.daN**, and the **six screws (4)** to **1 m.daN**.
- Remove the tool **4122-T**, the pegs **(3)** and the plastic clamp at **"c"**.
- Fit the timing cover **(12)**, the pulley **(13)**, the screw **(1)** *(LOCTITE E6 on the threading, tighten to **12 m.daN**).*

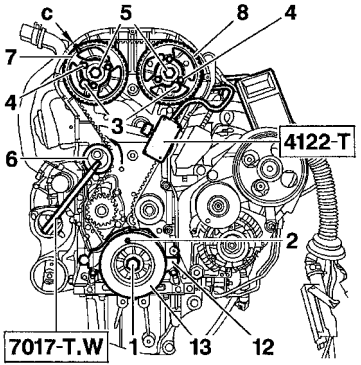

B1EP08VC

CHECKING AND SETTING THE VALVE TIMING

LFY | **Engines : LFY - RFV → 11/97 (continued)** | **RFV**

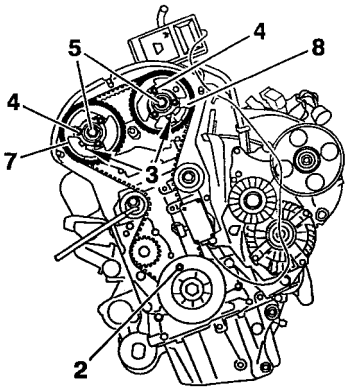

B1EP11WC

TENSIONING THE TIMING BELT

- Rotate :

Engines **LFY - RFV** = **2 turns** of the crankshaft.

- Peg the crankshaft at **(2)**.
- Loosen the six screws **(4)** of pulleys **(7)** and **(8)**.
- Peg the hubs at **(3)**.

*(If necessary, turn the camshaft by the screw **(5)**).*

- Desserrer le galet **(6)**.
- Poser l'ortil **4122-T**.
- Effectuer une tension de :

Engines	LFY - RFV
New belt	26 SEEM units

- Tighten the roller **(6)** to **2 m.daN**.
- Remove the tools.

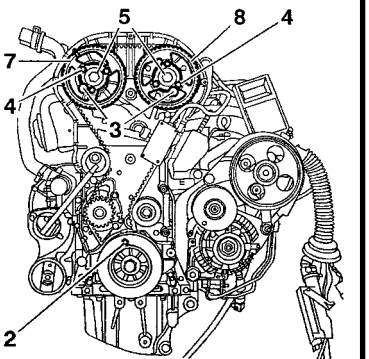

B1EP08WC

CHECKING AND SETTING THE VALVE TIMING

Engines : LFY - RFV ➔ 11/97 (continued)

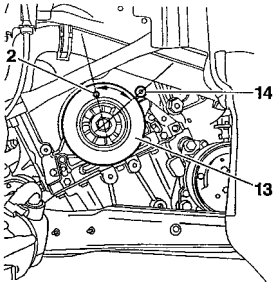

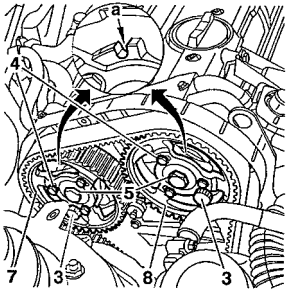

SETTING THE VALVE TIMING (Cont.)

- Rotate the crankshaft by **2 turns**.
- Peg the crankshaft at **(2)**.
- Loosen the screws **(4)**.
- Peg the hubs of pulleys **(7)** et **(8)** at **(3)**.
  (If necessary, turn the camshaft using the screw **(5)**).
- Tighten the screws **(4)** to **1 m.daN**.
- Remove the pegs.

CHECKING THE BELT TENSION

- Rotate the crankshaft by **1/4** turn to align the locating peg hole **(2)** of the pulley **(13)**, with the screw **(14)**.
  (Do not turn backwards).
- The tension measurements must be between:

Engines	LFY - RFV
New belt	36 ± 4 SEEM units

If the measurements are different, repeat the tensioning procedure.

CHECKING AND SETTING THE VALVE TIMING

Engine : LFY - RFV 11/97 ➔

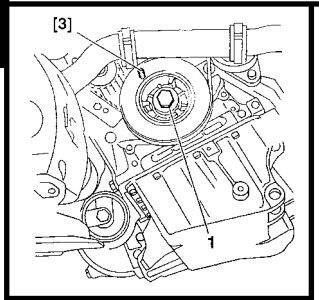

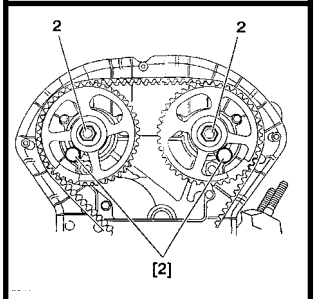

TOOLS

- **[1]** Belt tension measuring instrument	: **4122-T**	**Tool kit 7004-T**
- **[2]** Camshaft locating peg	: **9041-T.Z**	
- **[3]** Crankshaft locating peg	: **7014-T.N**	
- **[4]** Camshaft pulley locking peg	: **4200-T.G**	
- **[5]** Tensioning tool	: **7017-T.W**	
- **[6]** Toothed sector for locking the flywheel	: **9044-T**	

CHECKING THE SETTING

- Turn the engine using the crankshaft screw **(1)**.
- Peg the crankshaft using the tool **[3]**.

ESSENTIAL : Check that the crankshaft DAMPERS pulley is in good condition.
If the hub/pulley markings do not line up, the crankshaft pulley must be replaced.

- Peg the camshafts using the tool **[2]**.
  *(The locating pegs **[2]** should slide in easily).*
- If this is not the case, set the timing.

NOTE : Camshaft hubs (See page **120**).

B1EP12FC	B1EP12GC

CHECKING AND SETTING THE VALVE TIMING

LFY

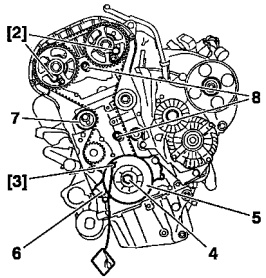

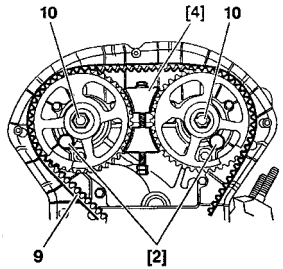

Engines : LFY - RFV 11/97 ➔ (continued)

SETTING THE VALVE TIMING.

- Peg the crankshaft using tool **[3]**.
- Peg the camshaft pulleys using tool **[2]**.
- Lock the flywheel using the tool **[6]**.

REMOVE :

- The peg **[3]**.
- The screw **(4)** *(Brush the screw thread).*
- The pulley **(5)**.
- The lower cover **(6)**.

B1EP11XC | B1EP120C

REFIT :

- The pulley **(5)**.
- The screw **(4)** *(Tighten moderately).*
- The peg **[3]**.

REMOVE :

- The tool **[6]**.
- The studs **(8)**.
- Fit the tool **[4]**.
- Loosen the screws **(10)**.
- Remove the tool **[4]**.
- Slacken the tensioner roller **(7)**.
- Remove the belt **(9)**.

RFV

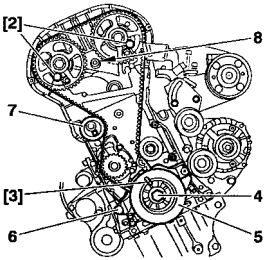

B1EP11ZC

CHECKING AND SETTING THE VALVE TIMING

LFY

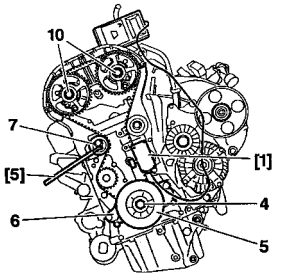

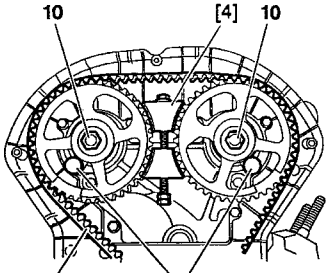

Engines : LFY - RFV 11/97 ➔ (continued)

PRETENSIONING THE TIMING BELT.

- Peg the crankshaft using the tool **[3]**.
- Peg the camshaft pulleys using the tool **[2]**.

NOTE : Ensure that the camshaft pulleys rotate freely on the hubs. Clean the contact faces of the pulleys and hubs.

Turn the camshaft pulleys in a clockwise direction to bring them to the end of the slots.

- Fit the belt **(9)**.
- Fit the tool **[1]**.
- Turn the roller **(7)** using the tool **[5]**.
- Pre-tension to : *(Pulleys slackened).*

Engines	LFY - RFV
New belt	55 SEEM units

- Tighten the screws of the roller **(7)** to **2 m.daN**.
- Fit the tool **[4]**.
- Tighten the screws **(10)** to **4 m.daN**.
- Remove the tools.
- Rotate the crankshaft by **six turns** *(normal direction of rotation).*

B1EP11YC B1EP120C

RFV

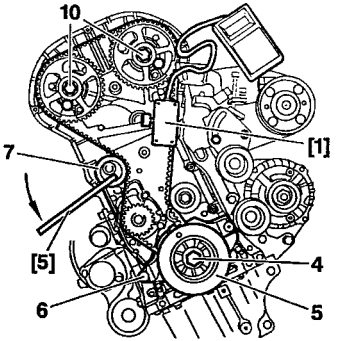

B1EP121C

CHECKING AND SETTING THE VALVE TIMING

LFY

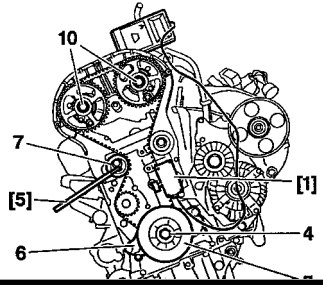

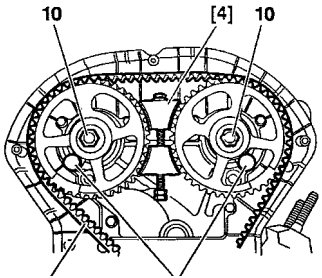

Engines : LFY - RFV 11/97 → (continued)

TENSIONING THE TIMING BELT.

- Peg the crankshaft using the tool **[3]**.
- Peg the camshaft pulleys using the tool **[2]**.

NOTE : If it is not easy to peg the camshaft hubs, loosen the tensioner roller **(7)**, and turn the camshafts using the screw **(10)**.

- Fit the tool **[4]**.
- Loosen the screws **(10)**.
- Remove the tool **[4]**.
- Loosen the tensioner roller **(7)**.
- Fit the tool **[1]** to the belt.
- Turn the roller **(7)** using the tool **[5]**.

B1EP11YC B1EP120C

RFV

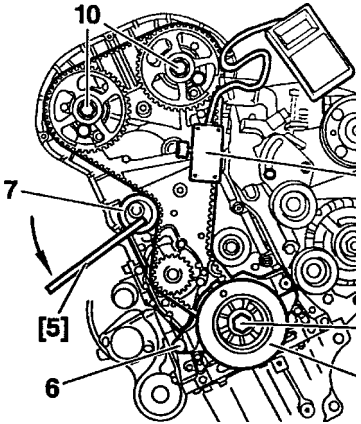

B1EP121C

CHECKING AND SETTING THE VALVE TIMING

LFY

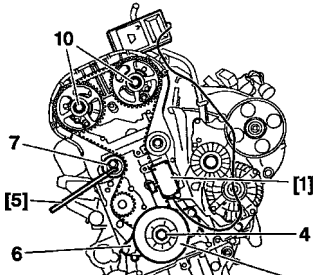

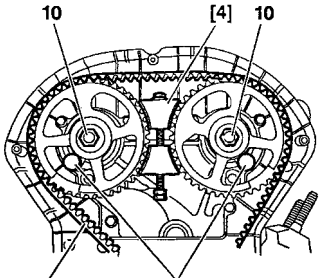

Engines : LFY - RFV 11/97 ➔ (continued)

- Tension to : *(Pulleys slackened).*

Engines	LFY - RFV
New belt	35 SEEM units

- Tighten the screw of the roller **(7)** to **2 m.daN**.
- Fit the tool **[4]**.
- Tighten the screws **(10)** to **7.5 m.daN**.
- Remove the tools.
- Rotate the crankshaft by two turns *(Normal direction of rotation)*.
- Check the pegging of the crankshaft/camshaft using tools **[2]** and **[3]**.

NOTE : Tools **[2]** and **[3]** should slide in easily.

- Remove the tools.

B1EP11YC B1EP120C

RFV

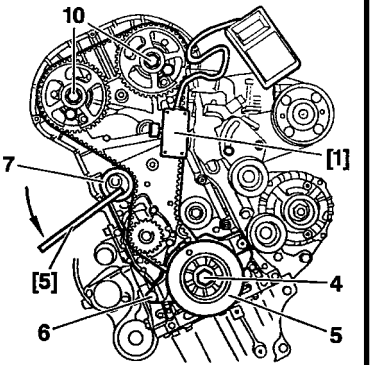

B1EP121C

CHECKING AND SETTING THE VALVE TIMING

Engine : RFN

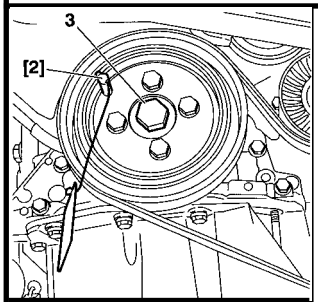

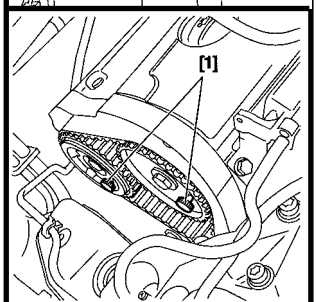

TOOLS

[1] Camshaft setting pegs	**: (-).0189.B**	
[2] Crankshaft setting peg	**: (-).0189.B**	**Tool kit C.0189.**
[3] Belt locking pin	**: (-).0189.K**	
[4] Angular tightening adaptor	**: 4069-T.**	
[5] Hub immobilising tool	**: 6310-T**	

CHECKING THE VALVE TIMING

- Turn the engine by the crankshaft pinion screw **(3)** to bring it to pegging position.
- Peg the crankshaft, using tool **[2]**.
- Peg the camshaft pulleys, using tools **[1]**.

NOTE : The pegs **[1]** must go in without effort.

B1BP22SC	B1BP25PC

CHECKING AND SETTING THE VALVE TIMING

Engine : RFN

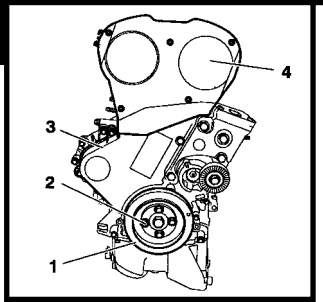

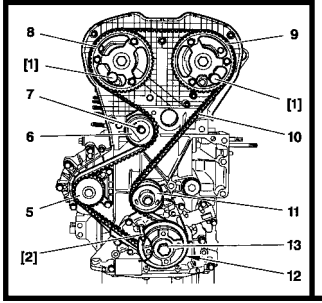

Checking the valve timing (continued)

WARNING : If the pegs do not engage without effort, restart the fitting and tensioning of the timing belt (see below).

Setting the valve timing

Remove

- Remove the screws **(2)**, the pulley **(1)**, upper valve cover **(4)**, lower valve cover **(3)**.
- Turn the engine by the screw **(13)** of the pinion **(12)** to bring it to pegging position.
- Peg the pulleys **(8)** and **(9)** using tools **[1]**.
- Peg the pinion **(12)** using tool **[2]**.
- Loosen the screw **(7)** of the tensioner roller **(6)**.
- Turn the tensioner roller **(6)** *(clockwise).*
- Remove the timing belt **(10)**.

B1BP23XC | B1EP14JD

CHECKING AND SETTING THE VALVE TIMING

Engine : RFN

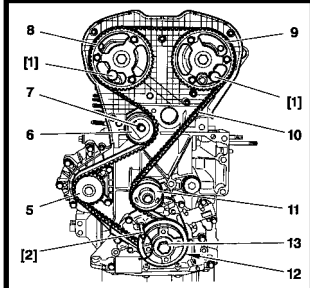

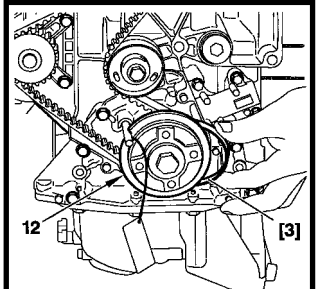

Refit (continued)

- Refit the belt **(10)** on the pinion **(12)**.
- Hold the belt **(10)** with tool **[3]**.
- Position the belt **(10)** in the following order :
- The guide roller **(11)**, the inlet camshaft pinion **(9)**, the exhaust camshaft pinion **(8)**, the water pump **(5)**, the tensioner roller **(6)**.

NOTE : Make sure that the belt **(10)** is as flush as possilble with the outer face of the various pinions and rollers.

- Remove the tools **[3]** and **[1]**.

Timing belt tension

Adjusting the tension

- Turn the roller **(6)** in the direction of the arrow **«b»** ; using an Allen key at **«a»**.
- Position the index **«c»** in its maximum setting at **«d»**.

IMPERATIVE : The index «c» must stand proud of the notch «f» by an angular value of 10°. If it does not, replace the tensioner roller (6) or the timing belt and the tensioner roller (6)

- Bring the index **«c»** to its adjusting position **«f»** by turning the tensioner roller **(6)** in the direction of the arrow **«e»**.

WARNING : The index **«c»** must not stand proud of the notch **«f»** : if it does, restart the timing belt tensioning operation.

IMPERATIVE : The tensioner roller (6) must not turn while its fixing is being tightened up. If it does, recommence the adjusting operation.

B1EP14JD	B1EP14KC

CHECKING AND SETTING THE VALVE TIMING

Engine : RFN

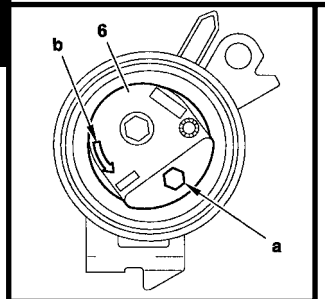

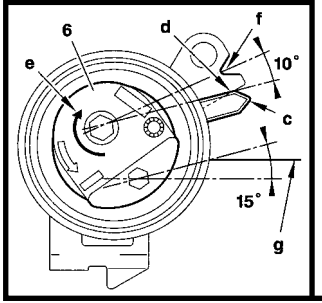

Adjusting the tension (continued)

- Tighten the screw **(7)** of the the tensioner roller **(6)** to **2.1 ± 0.2 m.daN**.

IMPERATIVE : The hexagonal drive of the tensioner roller (6) must be at 15° below the level of the cylinder head gasket «g». If not, replace the tensioner roller (6) or the timing belt and the tensioner roller (6).

Refit (continued)

- Remove the tools **[1]** et **[2]**.
-Turn the crankshaft **10 times** in the normal direction of rotation

IMPERATIVE : No pressure or outside action must be brought to bear on the timing belt.

- Peg the inlet camshaft pulley, using the tool **[1]**.

Checks

Timing belt tension

IMPERATIVE : Check the position of the index «c», it should be facing the notch «f». If the position of index «c» is not correct, restart the adjustment of its position.

Positioning of the crankshaft

- Fit tool **[2]**.
-As long as it is possible to fit tool **[2]**, continue with the refit operations.

IMPERATIVE : If it is not possible to fit tool [2], reposition the flange (14).

B1EP14LC	B1EP14NC

CHECKING AND SETTING THE VALVE TIMING

Engine : RFN

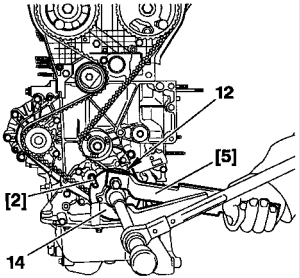

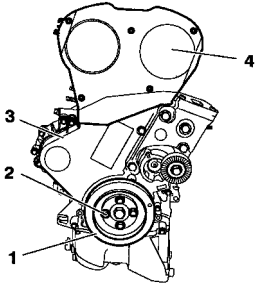

Checks (continued)

Repositioning the flange

- Immobilise the crankshaft using tool **[5]**.
- Loosen the screw **(13)**.
- Release the pinion **(12)** of the crankshaft.
- Bring the flange **(14)** to the pegging position; using tool **[5]**.
- Fit the tool **[2]**.
- Immobilise the crankshaft using tool **[5]**.
- Tighten screw **(13)** to **4 ± 0.4 m.daN**, then angular tighten **53° ± 4°** with tool **[4]**.
- Remove tools **[1]**, **[2]** and **[5]**.

Refit :

- The lower valve cover **(3)**.
- The upper valve cover **(4)**.
- The crankshaft pulley **(1)**.
- The screws **(2)**.
- Pretighten the screws **(2)** to **1.5 m.daN**.
- Tighten the screws **(2)** to **2.1 ± 0.5 m.daN**.

B1EP14PC | B1BP23XC

CHECKING AND SETTING THE VALVE TIMING

Engine : XFZ

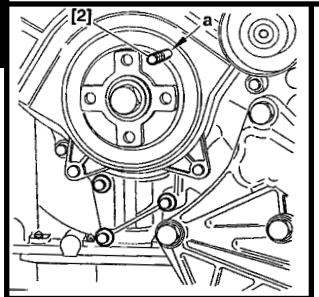

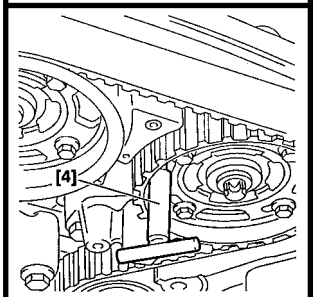

TOOLS

- **[1]** Belt tension measuring instrument	: **4122-T**	
- **[2]** Crankshaft locating peg	: **(-).0187 A**	**Tool kit (-).0187**
- **[3]** Camshaft pulley locating peg	: **(-).0187 B**	
- **[4]** Timing checking peg	: **(-).0187 C.Z.**	
- **[5]** Dynamic tensioner calibration shim	: **(-).0187 E.Z.**	
- **[6]** Camshaft locking lever	: **(-).0187 F**	
- **[7]** Belt retaining pin	: **(-).0187 J.**	

CHECKS

- Rotate the crankshaft by **2 turns** *(clockwise).*
- Peg the crankshaft at **(a)**, using tool **[2]**.
- Check that the peg **[4]** can be freely engaged in the cylinder heads at the camshaft pulleys at **(b)**.

B1EP09AC **B1EP103C**

CHECKING AND SETTING THE VALVE TIMING

Engine : XFZ (continued)

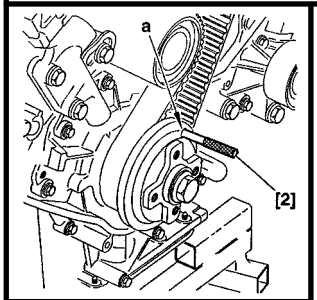

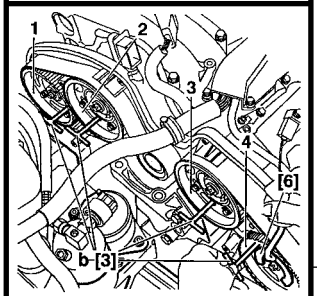

SETTING THE VALVE TIMING

- Peg the crankshaft at **(a)** using tool **[2]**.
- Loosen the camshaft pulley screws.
- Peg the camshaft pulleys at **(b)** using tool **[3]** in the following order :
- Camshaft pulley **(1)**,**(2)**,**(3)** and **(4)**.

NOTE : If necessary use tool **[6]**.

Preparation

- Remove the screws **(5)** and the plate **(6)**.
- Screw in a **M8x75** screw **(7)** to its stop.
- Fit a **M8x40** screw **(8)**.
- Fit the tool **[5]** by loosening the screw **(7)** if necessary.
- Tighten the screw **(8)** until it locks the tool **[5]**.
- Loosen the screws **(9)**.
- Loosen the screws **(7)** to slacken the belt.
- Mark the direction of fitting of the belt *(if being reused).*
- Remove the belt.

B1EP09CC	B1EP09EC	B1EP09DC	B1EP09FC

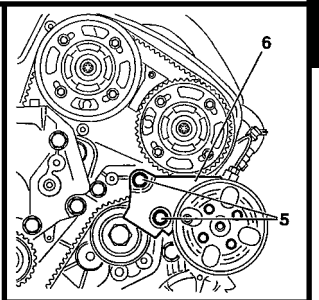

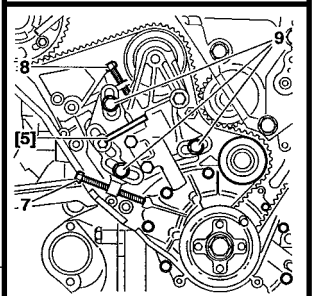

CHECKING AND SETTING THE VALVE TIMING

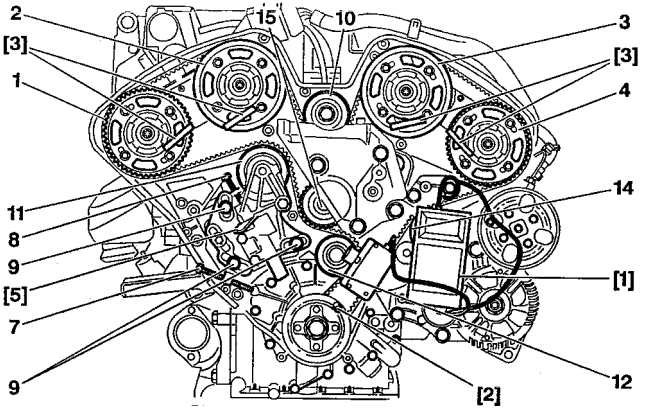

B1EP09GD

Engine : XFZ (continued)

SETTING THE VALVE TIMING

Refitting the belt.

- Check that the rollers **(10)**, **(11)**, **(14)** and **(12)** rotate freely.
- Rotate the camshaft pulleys *(anti-clockwise)* as far as the slots allow.
- Tighten the camshaft pulley screws to **0.5 m.daN**.
- Loosen the camshaft pulley screws by **45°**.
- Tighten the screws **(9)** to **1 m.daN**.
- Loosen the screws **(9)** by **45°**.

WARNING :Ensure that the belt is fitted in the right direction :
Facing the timing side, it should be possible to read the writing on the belt.

- Put the belt in place in the following order :
- Crankshaft pinion *(hold the belt using the tool **[7]**)*, the guide roller **(14)** camshaft pulleys **(4)** and **(3)**, guide roller **(10)**, camshaft pulleys **(2)** and **(1)**, tensioner roller **(11)**, water pump pulley **(15)**, guide roller **(12)**.

CHECKING AND SETTING THE VALVE TIMING

Engine : XFZ (continued)

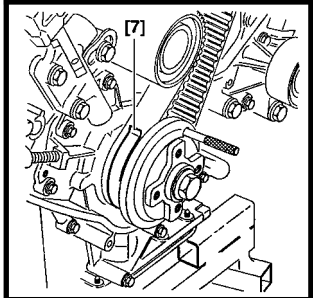

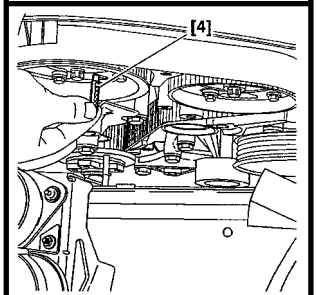

SETTING THE VALVE TIMING

NOTE : When positioning the belt on the camshaft pulleys, rotate it in an anti-clockwise direction in order to engage the nearest tooth.
The angular displacement of the pulleys must not exceed one tooth.

- Lightly tighten the screw **(7)** so that the belt is lightly tensioned.
- Remove the tool **[7]**.
- Fit the tool **[1]**.
- Tighten the belt using the screw **(7)** to obtain a tension of : **83 ± 2 SEEM units = 50 daN**.

ESSENTIAL : Check that the camshaft pulleys are not against the end of the slots.
(Otherwise, repeat the belt fitting operation).

- Remove the tools.
- Tighten the camshaft pulley screws in the following order: **(1)**, **(2)**, **(3)** and **(4)** Tighten to **1 m.daN**.
- Tighten the screws **(9)** to **2.5 m.daN** in the order indicated.
- Rotate the crankshaft by **2 turns** *(clockwise).* Do not turn backwards.
- Peg the crankshaft using the tool **[2]**.
- Loosen the camshaft pulley screws and the screws **(9)**.

B1EP09HC	B1EP09JC

CHECKING AND SETTING THE VALVE TIMING

Engine : XFZ (continued)

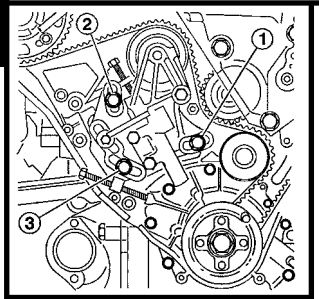

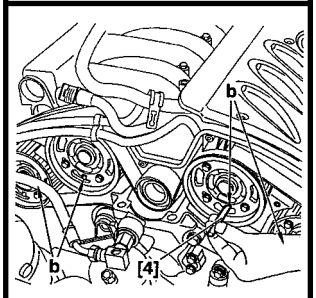

SETTING THE VALVE TIMING

- Remove the screw **(8)**.
- Loosen the screw **(7)** so that the tool **[5]** can move without any play**.**.
- Wait for 1 minute *(Damper action).*
- Check that the tool **[5]** can move without any play.
- Remove the tool **[5]**.
- Tighten the screws **(9)** to **2.5 m.daN** *(In the order indicated).*
- Remove the screw **(7)** and the tool **[2]**.
- Rotate the crankshaft by **2 turns** *(clockwise). (Do not turn backwards).*
- Peg the camshafts in the order **4, 3, 2** and **1** as follows :
- Peg **[3] ENGAGES :** Loosen the camshaft pulley screws by **45°**.
- Peg **[3**] **DOES NOT ENGAGE :** Loosen the camshaft pulley screws by **45°** and turn the hub using the tool **[6]** until the peg engages.
- The camshaft pulley screws must not be against the end of the slots.
  (Otherwise, repeat the belt fitting operation).
- Tighten the camshaft pulley screws in the following order : **4, 3, 2** and **1**. Tighten to **1 m.daN**.
- Remove the tools.
- Rotate the engine by **2 turns**.
- Check the timing.

B1EP102C	B1EP09BC

CHECKING AND SETTING THE VALVE TIMING

Engines : DHX

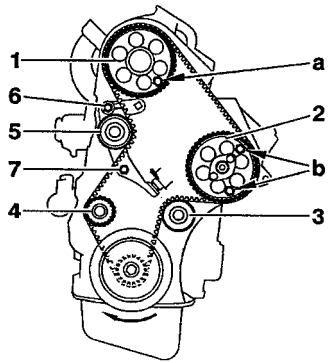

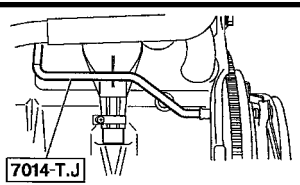

TOOLS

- Crankshaft locating peg : **7014-T.J.** or **7014-T.R.**
- Camshaft and injection pump locating peg : **7004-T.G.** **Tool kit 7004-T**

CHECKS

- Peg the crankshaft.
- Peg the pulleys **(1)** and **(2)** at **«a»** and **«b»**.

SETTING THE VALVE TIMING.

- Peg the crankshaft.
- Peg the pulleys **(1)** at **«a»** and **(2)** at **«b»**.
- Fit the belt in the following order :
  Crankshaft pinion, guide roller **(3)**, injection pump pulley **(2)**, camshaft pulley **(1)**, tensioner roller **(5)**, water pump **(4)**.
- Remove the pegs.
- Free the tensioner roller **(5)** (nut **(6)** and screw **(7)**), retighten the screw **(7)**.
- Rotate the crankshaft by **2 turns**. Do not turn backwards.
- Loosen the tensioner roller **(5)**, allow the tensioner to operate.
- Retighten the screw **(7)** and the nut **(6)**. **Tighten to 1.8 m.daN**.
- Check the setting.

NOTE : The injection pump is removed without changing the valve timing.
*(immobilise the injection pump pulley using the screws **(8x125)** at **«b»**).*

B1EP09KC | B1EP080C

CHECKING AND SETTING THE VALVE TIMING

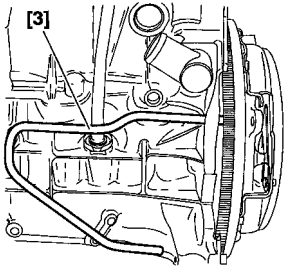

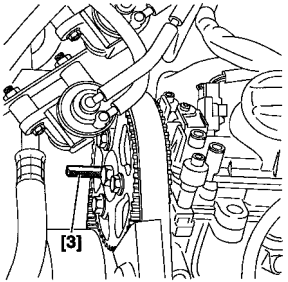

Engine : RHY - RHZ

Tools

[1] Belt tension measuring instrument	:	**4122-T**
[2] Tension lever	:	**(-).188.J2**
[3] Engine flywheel peg	:	**(-).0288.D**
[4] Belt compression spring	:	**(-).0188.K**
[5] Camshaft pinion peg	:	**(-).0188.M**
[6] Engine flywheel lock	:	**(-).0188.F**
[7] Set of blocking plugs	:	**(-).0188.T**
[8] Crankshaft pulley extractor	:	**(-).0188.P**

Checking the setting of the valve timing.

Peg :
- The engine flywheel, tool **[3].**
- The camshaft, tool **[5]**.

WARNING : Should it be impossible to peg the camshaft, check that the offset between the camshaft pinion hole and the pegging hole is not more than 1 mm, with the help of a mirror « a » and a Ø 7 mm screw.

IMPERATIVE : If pegging is impossible, restart the adjusting.
(See corresponding operation).

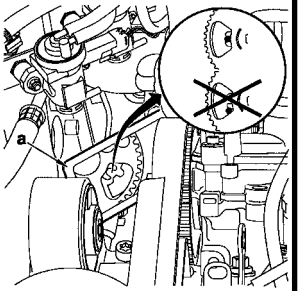

B1CP04CC | B1BP1TSC | B1BP1TTC

CHECKING AND SETTING THE VALVE TIMING

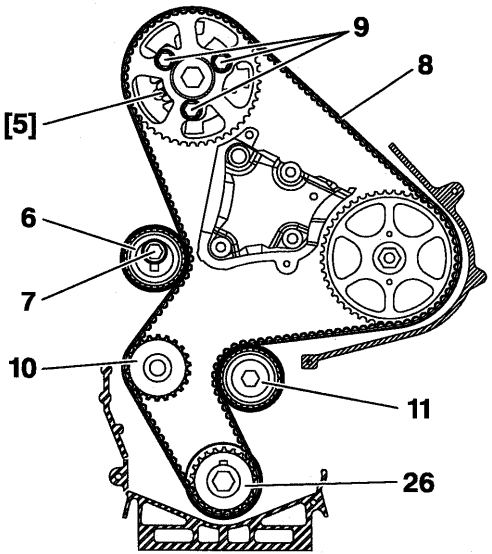

Engine : RHY - RHZ

Setting the valve timing.

Peg :

- The engine flywheel, tool **[3]**.
- The camshaft, tool **[5]**.

Loosen :
- The three screws **(9)**.
- The screw **(7)** of the tensioner roller **(6)**.

Remove the timing belt.

Checks.

IMPERATIVE : Just before refitting, carry out the checks below :

Check that :

- The rollers **(6), (11)** and the water pump **(10)** turn freely *(without play or tightness).*
- There are no traces of oil *(on camshaft or crankshaft).*

B1EP13DD

CHECKING AND SETTING THE VALVE TIMING

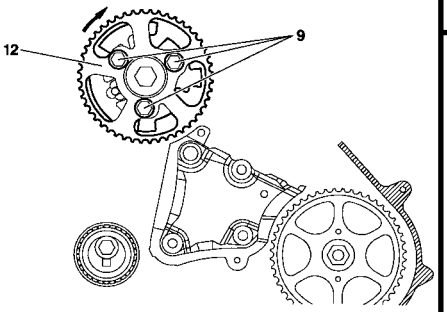

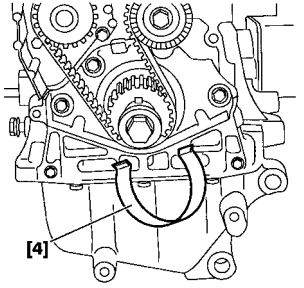

Engine : RHY- RHZ

Setting the valve timing (continued).

- Retighten screws **(9)** by hand.
- Turn the pinion **(12)** (clockwise) to the bottom of the buttonhole.
- Refit the belt on the crankshaft, in the following order, using the tool **[4]** to keep the belt tight at **«a»**.

- Guide roller **(11)**.
- Fuel high pressure pump pinion **(13)**.
- Camshaft pinion **(12)**.
- Water pump pinion **(10)**.
- Tensioner roller **(6)**.

NOTE : If needed, slightly turn the pinion **(12)** anti-clockwise *(not by more than one tooth).*

- Remove the tool **[4].**

B1EP13ED | B1EP13FC

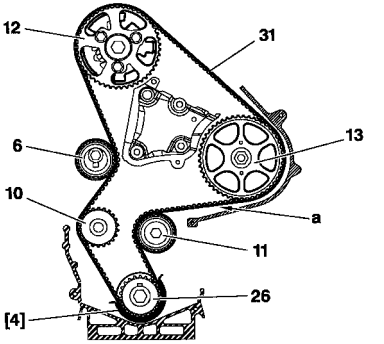

B1EP13GD

CHECKING AND SETTING THE VALVE TIMING

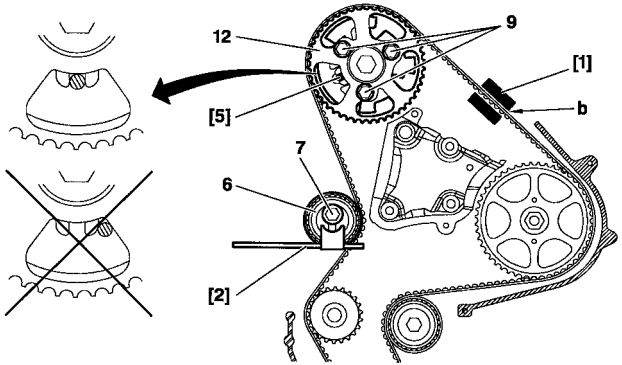

Engine : RHY - RHZ

Setting the valve timing (continued).

- Position tool **[1]** on the belt at **«b»**.
- Turn the roller **(6)** *(anti-clockwise)* using tool **[2]** to attain a tension of :

98 ± 2 SEEM units

- Tighten screw **(7)** of the roller **(6)**, tighten to **2.5 m.daN**.
- Remove one screw **(9)** from the pinion **(12)**.
  (to check that the screws are not against the end of the buttonhole).
- Tighten the screws **(9)** to **2 m daN**.
- Remove tools **[1],[2],[3]** and **[5]**.
- Rotate the crankshaft **8 times** *(normal direction of rotation).*
- Fit the tool **[3]**.
- Loosen screws **(9)**.
- Fit tool **[5]**.
- Loosen screw **(7)** *(to free the roller **(6)**).*
- Fit tool **[1]**.
- Turn the roller **(6)** *(anti-clockwise)*, tool **[2]**, to attain a tension of :

54 ± 2 SEEM units .

B1EP13HD

CHECKING AND SETTING THE VALVE TIMING

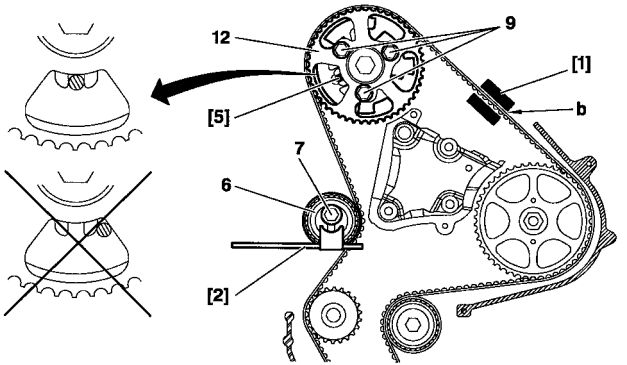

Engine : RHY - RHZ

Setting the valve timing (continued).

Tighten :
- The screw **(7)** of the roller **(6)** to **2.5 m.daN**.
- The screw **(9)** to **2.m.daN**.
- Remove the tool **[1]**.
- Refit the tool **[1]**.
- Tension value should be : **54 ± 3 SEEM units**.

IMPERATIVE : If value is incorrect, restart the operation

- Remove tools **[1], [3]** and **[5]**.
- Rotate the crankshaft **2 times** *(normal direction of rotation).*
- Fit the tool **[3]**.

WARNING : Should it be impossible to peg the camshaft, check that the offset between the camshaft pinion hole and the pegging hole is not more than 1 mm..
In the case of an incorrect value, recommence the operation.

- Remove the tool **[3]**.

B1EP13HD

CHECKING AND SETTING THE VALVE TIMING

Engine : P8C

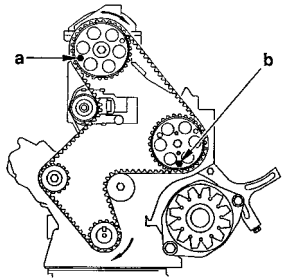

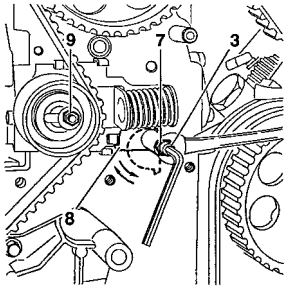

TOOLS

- Crankshaft peg : **7014-J** or **7017-T.R.**
- Camshaft pulley and injection pump peg : **7004-T.G**. **Tool kit 7004-T**

CHECKS

- Peg the crankshaft.
- Peg the camshaft pulley at **«a»** and the injection pump pulley at **«b»**.

SETTING THE VALVE TIMING

- Peg the crankshaft.
- Peg the camshaft pulley at **«a»**.
- Peg the injection pump pulley at **«b»**.

To slacken the belt.

- Loosen the nut **(9)**.
- Loosen the nut **(3)** and the screw **(7)** *(**5 mm** six-sided spanner, **10 mm** flat spanner).*
- Move the tensioner roller eccentric **(8)**.
- Retighten the nut **(9)**.
- Remove the belt.

B1EP09LC | B1EP09MC

CHECKING AND SETTING THE VALVE TIMING

Engine : P8C (continued)

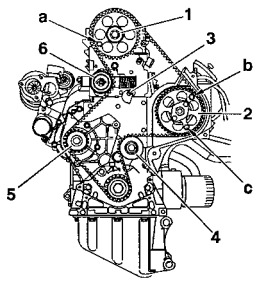

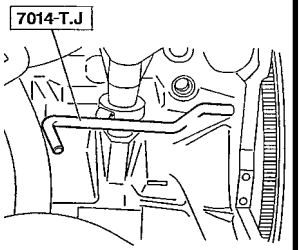

SETTING THE VALVE TIMING

- Fit the belt in the following order :
  Injection pump pulley **(2)** *(strap tensioned),* engage half the width of the belt on :
  the guide roller **(4)**, the crankshaft pinion, the water pump pinion **(5)**, the camshaft pulley **(1)**,
  the tensioner roller **(6)**.
- Align the belt.
- Remove the three pegs.
- Loosen the nut **(9)**.
- Rotate the crankshaft by **2 turns** until the pegs can be engaged *(without refitting the pegs).*
- **ESSENTIAL : Never turn the crankshaft backwards.**
- Tighten the nut **(9)** Tighten to **1 m.daN**.
- Rotate the crankshaft by **2 turns** to reach the pegging point *(without refitting the pegs).*
- **ESSENTIAL : Never turn the crankshaft backwards.**
- Loosen the nut **(9)** by one turn and allow the spring to operate.
- Tighten the nut **(9)** and the screw **(3)**. Tighten to **1 m.daN**.
- Refit the three pegs.

NOTE : If it is impossible to refit one of the pegs, restart the belt fitting operation.
- Remove the pegs.

B1EP081C	B1EP082C

CHECKING AND SETTING THE VALVE TIMING

Engine : THY

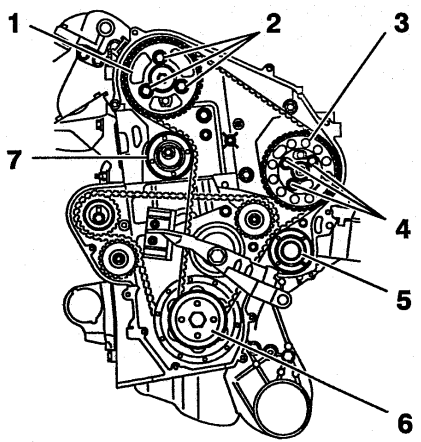

B1EP11HC

TOOLS

- Belt tension measuring instrument	: **4099-T** or **4122-T.**	
- Crankshaft locating peg	: **7014-T.J.**	**Tool kit 7004-T**
- Camshaft pulley locating peg	: **5711-T.A.**	**Tool kit 5711-T**
- Injection pump pulley locating peg	: **5711-T.B.**	
- Tensioner lever		: **5711-T.E.**

CHECKS

- Peg the flywheel *(behind the engine)*.
- Visually check the pegging of the following components :
- The camshaft pulley **(1)**.
- The injection pump pulley **(3)**.

SETTING THE VALVE TIMING

- Peg the flywheel *(behind the engine).*
- Peg the camshaft pulley **(1)**.
- Peg the injection pump pulley **(3)**.
- Loosen the screws **(2)** and **(4)**, then manually retighten, then loosen again by **1/6 of a tur**n.
- Turn the pulleys **(1)** and **(3)** to the end of the slots *(clockwise)*.

CHECKING AND SETTING THE VALVE TIMING

Engine : THY (continued)

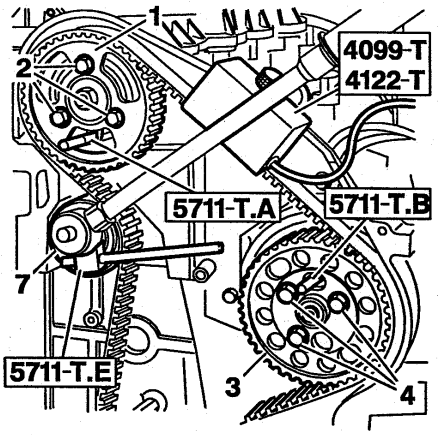

B1EP11JC

SETTING THE VALVE TIMING (continued)

- Fit the belt in the following order :
  The crankshaft pinion **(6)**,the guide roller **(5)**, the injection pump pulley **(3)**, the camshaft pulley (1),the tensioner roller **(7)**.
- If necessary, turn the pulleys **(1)** and **(3)** to make it easier to fit the belt.
- Fit the tool **4099-T** or **4122-T**.
- Pre-tension using the tool **5711-T.E** to obtain a value of :
  - **New belt : 107 SEEM units**
  - **Reused belt : 80 SEEM units**
- Tighten the tensioner roller **(7)** to **4.5 m.daN**.
- Tighten the screws **(2)** and **(4)** to **2.5 m.daN**.
- Remove the tools.
- Rotate the engine by **10 turns**.
- Peg the flywheel.
- Loosen the screws **(2)** and **(4)** then manually retighten, then tighten again by **1/6 turn**.
- Loosen the tensioner roller **(7)**.

CHECKING AND SETTING THE VALVE TIMING

Engine : THY (continued)

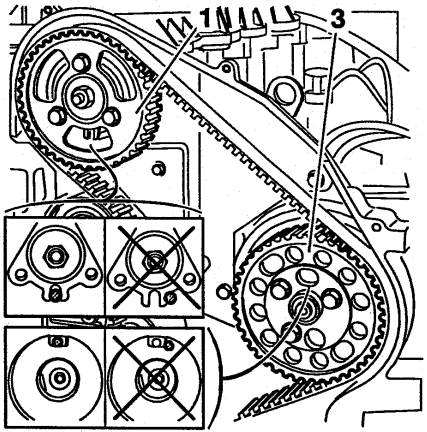

B1EP11KC

CHECKING THE VALVE TIMING

- Peg the camshaft pulley **(1)**.
- Peg the injection pump pulley **(3)**.
- Fit the tool **4099-T** or **4122-T**.
- Tension using the tool **5711-T.E** to obtain a value of :
  - **New belt : 58 SEEM units**
  - **Reused belt : 51 SEEM units**
- Tighten the tensioner roller **(7)** to **4.5 m.daN**.
- Tighten the screws **(2)** and **(4)** to **2.5 m.daN**.
- Remove the tools.
- Rotate the engine by **2 turns**.
- Check the setting.

XANTIA	SPECIAL FEATURES OF THE TIMING

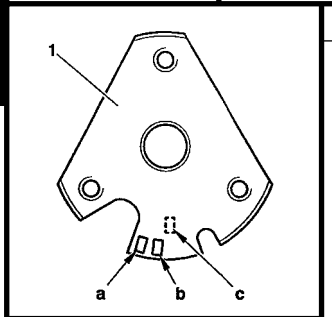

Camshaft hub marking ➔ 11/97 — **LFY**

	Identification marks a - b
Inlet camshaft	«a»
Exhaust camshaft	«b»
	Number in mark c
Inlet camshaft	N° 1
Exhaust camshaft	N°2

Note : The identification marks are visible next to the pegging slot. Mark **«c»**, bearing the number, is engraved on the rear side of the hub **(1)**.

B1EP11LC **B1EP11MC**

SPECIAL FEATURES OF THE TIMING

XANTIA - XM

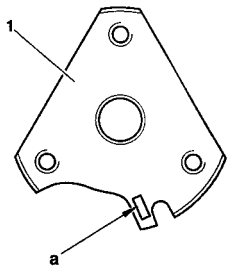

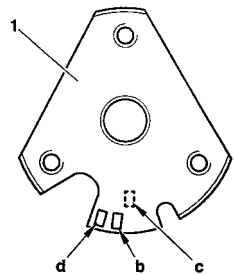

Camshaft hub marking → 11/97

RFV

	1st possibility	2nd possibility
	Identification marks a - b - c	
Inlet camshaft	No mark	«b»
Exhaust camshaft	«a»	«c»
		Mark number d
Inlet camshaft		N° 3
Exhaust camshaft		N° 4

Note : The identification marks are visible next to the pegging slot. Mark **«c»**, bearing the number, is engraved on the rear side of the hub **(1)**.

B1EP11NC B1EP11PC

SPECIAL FEATURES OF THE TIMING

Camshaft hub marking 11/97 ➔

LFY - RFV

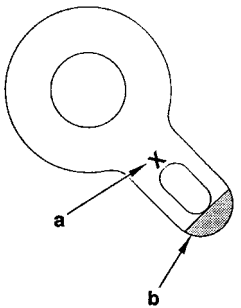

B1EP122C

Engines	Hubs	“a” Marking	“b” Paint marking
LFY	Inlet	C	BLUE
	Exhaust	D	BROWN
RFV	Inlet	A	GREEN
	Exhaust	B	BLUE

VALVE CLEARANCE SETTING — ALL TYPES

The valve clearances must be checked with the engine cold

	● Inlet	⊗ Exhaust
Petrol all types (except 2.0i 16V and 3.0i)	0.20 mm ± 0.05	0.40 mm ± 0.05
Petrol 2.0i 16V, 3.0i Diesel, 2.0HDi	Hydraulic adjustment	
XM Diesel		
Diesel All types (except XM and 2.0 HDi)	0.15 mm ± 0.08	0.30 mm ± 0.08

POSSIBLE PROCEDURES
For engines with 4 cylinders in a line (1-3-4-2)

Rocking

Rocking	Adjust
1 ● ⊗ 1	4 ● ⊗ 4
3 ● ⊗ 3	2 ● ⊗ 2
4 ● ⊗ 4	1 ● ⊗ 1
2 ● ⊗ 2	3 ● ⊗ 3

⊗ Exhaust

● Inlet

Fully open (Exhaust)

Valves fully open	Adjust
⊗ 1	3 ● ⊗ 4
⊗ 3	4 ● ⊗ 2
⊗ 4	2 ● ⊗ 1
⊗ 2	1 ● ⊗ 3

Engines without hydraulic adjustment : the clearance **(J)** should be checked opposite the cam.

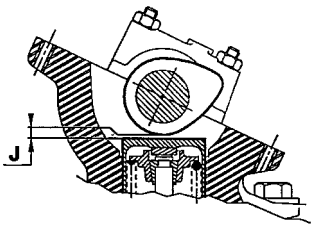

B1DP13QC

ALL TYPES	CHECKING THE OIL PRESSURE						
Tool kit 4103-T	To be read with the Petrol and Diesel correspondence tables						
	XU All Types				EW	XU	V6
	1.6 i	1.8 i	1.8 i 16 V	2.0 i 16V		2.0 i Turbo CT	3.0 i
Engine type	**BFZ**	**LFX**	**LFY**	**RFV**	**RFN**	**RGX**	**XFZ**
Temperature (°C)	80°				90°	80°	90°
Pressure (Bars)	5.3		6	6.4	4	5.5	5
Rpm	4 000						3 000

	XUD	DW			XUD	DK
	1.9 TD	2.0 HDi		2.0 HDi 16V	2.1 TD	2.5 TD
Engine type	**DHX**	**RHY**	**RHZ**	**RFW**	**P8C**	**THY**
Temperature (°C)	80°				100°	90°
Pressure (Bars)	5	4			2.5	3
Rpm	4 000				4 000	2 000

ENGINE OIL PRESSURE SWITCH							ALL TYPES
Engine type			**Location**	**Tightening torque (m.daN)**	**Warning lamp goes out at : (Bars)**		
XU All Types	1.6 i	**BFZ**	Above the oil filter	2.8	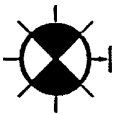	0.5	
	1.8 i	**LFX**					
	1.8 i 16 V	**LFY**					
	2.0 i Turbo CT	**RGX**					
EW	2.0 i 16 V	**RFN**					
XU TT	2.0 i 16 V	**RFV**	Above the starter motor	3.4			
V6 TT	3.0 i V6	**XFZ**	Near the oil filter	3.5			

D6AP01MB **D6AP01ND**

ALL TYPES			ENGINE OIL PRESSURE SWITCH				
Engine type			Location	Tightening torque (m.daN)	Warning lamp goes out at : (Bars)		
XUD All Types	1.9 TD	DHX	Above the oil filter	3.4	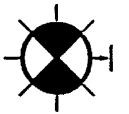 D6AP01MB	0.5	 D6AP01ND
	2.0 TD	P8C	Near the oil filter	2.8			
DW10 All Types	20 HDi	RHY					
		RHZ					
	2.0 HDi 16V	RHW					
DK5	2.5 TD	THY	Above the starter motor	2.3			

OIL FILTERS — ALL TYPES

To be read with the Petrol and Diesel correspondence tables

Type of oil filters to be fitted after the 1st revision		XU All Types						ES9J4
		1.6 i	1.8 i	1.8 i 16 V	2.0 i 16 V	2.0 i T.CT	2.0HDi 16V	3.0 i V6
		BFZ	LFX	LFY	RFV	RGX	RFN	XFZ
PURFLUX	LS 867	●	●	●	●	●		
	LS 304	●	●	●	●	●	●	
	LS 880							●

Type of oil filters to be fitted after the 1st revision		XUD	DW			XUD	KD
		1.9 TD	2.0 HDi		2.0 HDi 16V	2.1 TD	2.5 TD
		DHX	RHY	RHZ	RHW	P8C	THY
PURFLUX	LS 867	●				●	●
	LS 304	●	●	●		●	●

		Ø (mm)	Height (mm)
SPECIFICATION	LS 867	76	89
	LS 304		
	LS 880	86	97

FILLING AND BLEEDING

- Fit the filling cylinder **4520-T** to the filler orifice.
- Use the coolant to ensure protection between **- 15° C** and **- 37° C**.
- Slowly fill the system.

NOTE : Keep the cylinder filled up *(visible level).*

- Close each bleed screw as soon as the coolant flows without air bubbles.
- Start the engine : Engine speed **1500 rpm**.
- Maintain this speed until the cooling fans have cut in and cut out.
- Stop the engine and allow it to cool down.
- Remove the filling cylinder **4520-T**.
- Top up the system to the **max.** mark, with the engine cold.
- Refit the filler cap.

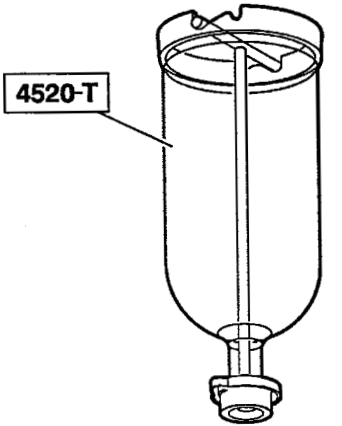

E5AP141C

IDLING - ANTI-POLLUTION							XANTIA - XM - SYNERGIE	
Vehicles		Engine type	Emission standard	Make - Injection type	Idling speed (± 50 rpm)		% Content	
					Manual gearbox	Auto. Gbox : N gear engaged	CO	CO2
XANTIA	1.6 i	BFZ	L3	M. MARELLI 8P13	850	800	< 0.5	> 9
	1.8 i	LFX		M. MARELLI 1AP20				
	1.8 i 16V	LFY		SAGEM SL96 (Manual)/ BOSCH MP7.2 (Automatic)				
	1.8 i 16V Dual fuel	LFY		SAGEM SL96 (Petrol)/ NEKAM KOLTEC (LPG)				
	1.8 i 16V	LFY	L4	BOSCH MP7.3				
	2.0 i 16V	RFV	L3	BOSCH MP5.2	800			
	3.0 i V6	XFZ		BOSCH MP7.0	650 *	650		
XM	2.0 i 16V	RFV		BOSCH MP5.2	800	800		
	2.0 i Turbo CT	RGX		BOSCH MP3.2				
	3.0 i V6	XFZ		BOSCH MP7.0	650 (*)	650		
SYNERGIE	2.0 i 16V	RFN	IF L5	M. MARELLI 48P2	800		< 0.5	> 9

*Variable speed depending on : Battery voltage, parking manoeuvre, temperature.

XANTIA	PETROL INJECTION						
	XANTIA						
	1.6 i	1.8 i	1.8 i 16 V Dual fuel		1.8 i 16 V	2.0 i 16 V	3.0 i V6
Engine type	**BFZ**	**LFX**	**LFY**		**LFY**	**RFV**	**XFZ**
Emission standard	L3				L4	L3	
Make Injection type	M. MARLELLI 8P13	M. MARELLI 1AP20	SAGEM SL96		BOSCH MP 7.3	BOSCH MP5.2	BOSCH MP7.0
Fuel pressure (bars)	2.5	3		/	3		3
Overspeed cut-off (rpm)	6 300	6400	6500	M. MARELLI 1AP40	6500	6530	6520
Injection cut-in during deceleration (rpm)	1 500	1400	1500	3	1500	1200	1100
Résistance injecteurs (en ohms)	16	14.5	16	6 500	14.5	14.5	12
Engine coolant temperature sensor resistive value (ohms)	3800 at 10° C		2 500 at 20° C		800 at 50° C	230 at 90° C	
Idling actuator or stepper motor resistive value (ohms)	Stepper motor : 53						
Air temperature sensor resistive value (ohms)	3800 at 10° C		2 500 at 20° C		800 at 50° C	230 at 90° C	

PETROL INJECTION				XM - SYNERGIE
	XM			SYNERGIE
	2.0 i 16 V	2.0 i Turbo CT	3.0 i V6	2.0 i 16 V
Engine type	**RFV**	**RGX**	**XFZ**	**RFN**
Emission standard	L3			IF L5
Make **Injection type**	BOSCH MP5.2	BOSCH MP3.2	BOSCH MP7.0	M. MARELLI 48P2
Fuel pressure (bars)	3			
Overspeed cut-off (rpm)	6 530	6 400	6 520	
Injection cut-in during deceleration (rpm)	1 200	1 400	1 100	
Injector resistive value (ohms)	14.5	16	12	
Engine coolant temperature sensor resistive value (ohms	3 800 at 10°C	2 500 at 20° C	800 at 50°C	230 at 90° C
Idling actuator or stepper motor resistive value (ohms)	Stepper motor : 53	E.V. : 22	E.V. : 11	Stepper motor : 53
Air temperature sensor resistive value (ohms)	3 800 at 10°C	2 500 at 20° C	800 at 50°C	230 at 90° C

ALL TYPES	ANTI-POLLUTION TECHNICAL CHECKS (FRANCE)

All Types Petrol CO Corrected (In %)	All Types Diesel (m^{-1})
Conditions : At idle, engine warm. **➔ 01/96** Less than **4.5 %** for vehicles registered before **10/86**. Less than **3.5 %** for vehicles registered after **10/86**. With catalytic converter Greater than 2.0i 89 M.Y. All Types 93 M.Y. **CO** less than **0.5 % at idle speed.** **CO** less than **0.3 % at fast idle speed** between **2500** and **3000 rpm (*)** **(*) Except :** **TU5 JP : 2200 rpm ± 100.** **XU5JP : 1500 rpm or 3100 rpm (± 100).** **XU7JP : 1500 rpm or 3100 rpm (± 100).** **NOTE :** On **XU5JP** and **XU7JP** engines at 1500 rpm, the check should be carried out with main beams, rear heated screen and cabin ventilation switched on and with the front wheels on maximum lock (if the vhicle has power-assisted steering). Lambda Probe value **0.97** to **1.03**.	**Features :** **Xantia, MMDCM** injection **on 1.6i** (BFZ) engine, **1.8i** (LFZ) engine and **2.0i** (RFX) engine. Should the check reveal excessive **CO**, make sure that the ECU channel **25** is not connected to earth in error. **(See Info-rapid N° 77)** **01/96 ➔** **Atmospheric engine.** **Less than 2.5 m^{-1}** **Turbocharged engine.** **Less than 3.0 m^{-1}**

EMISSION STANDARDS							ALL TYPES
STANDARD				APPLICATION		NOTES	CHARACTERISTICS
E.E.C.	PSA		Engines	Vehicles	Applicable		
	A-S	RP					
ECE R 15.04	K K'	15.04 15.04	Petrol Diesel	Private vehicles : > 2 litres • new cyl. < 2 litres • existing cyl. < 2 litres	 → 06/89 → 06/92 → 12/92	Brussels directive 83/351 → except special derogations for certain private vehicles cyl. > 2 litres	With oxygen sensor, without catalytic converter
				Utility vehicles : All Types	→ 10/89 imminent	→ Utility vehicle limits = private vehicle limits increased by 25 % → For private vehicles and utility vehicles in major export	
ECE R 15.05	W vp	15.05	Petrol	Private vehicles : > 2 litres • new models • existing models	 01/10/88 → 01/10/89 →	Brussels directive 88/76 " Luxembourg Accords " → Replaced by 89/458 + 91/441	

INJECTION

ALL TYPES	EMISSION STANDARDS						
STANDARD				APPLICATION		NOTES	CHARACTERISTICS
E.E.C.	PSA		Engines	Vehicles	Applicable		
	A-S	RP					
ECE R 15.05	W vu	15.05	Petrol Diesel	Utility vehicles : All Types • new models • existing models	01/10/88 → 01/10/89 → → 10/94	Brussels directives 88/76 and 88/436 → Utility vehicle limits private vehicle limits of Brussels directive 88/436 7 classes of limits by vehicle weight	
US 83	Z	US 83	Petrol Diesel	Private vehicles : • certain non-EEC European countries • certain Export countries	Current	→ Adoption of the U.S.	With oxygen sensor and catalytic converter for petrol vehicles

EMISSION STANDARDS							ALL TYPES
STANDARD				APPLICATION		NOTES	CHARACTERISTICS
E.E.C.	PSA		Engines	Vehicles	Applicable		
	A-S	RP					
US 87	Y	US 87	Diesel	Private vehicles : • certain non-EEC European countries • certain Export countries	Current	→ Adoption of the U.S. standard	With catalytic converter and EGR
US 93	Y2	US 93	Petrol Diesel	Private vehicles : • certain Export countries	Current	→ Adoption of the U.S. standard	
US 84 LDT	X1	US 84	Petrol Diesel	Utility vehicles : • certain non-EEC European countries • certain Export countries	Current	→ Adoption of the U.S. standard for light utility vehicles	
US 87 LDT	X2	US 87	Petrol Diesel	Utility vehicles : • certain non-EEC European countries • certain Export countries	Current	→ Adoption of the U.S. standard for light utility vehicles	

ALL TYPES	EMISSION STANDARDS						
STANDARD				APPLICATION		NOTES	CHARACTERISTICS
E.E.C.	PSA		Engines	Vehicles	Applicable		
	A-S	RP					
US 90 LDT	X3	US 90	Petrol Diesel	Private vehicles : • certain non-EEC European countries • certain Export countries	Current	→ Adoption of the U.S. standard for light utility vehicles	
EURO 1 **(EURO 93)**	L1	CEE 19.5	Petrol Diesel	Private vehicles : < 1.4 litres • new models • existing models	07/92 → → 01/07/93 → 31/12/94	Brussels directive 89/458 → Possible alternative to emission standard L from 1992 to 1994	
EURO 1 **(EURO 93)**	L	CEE 19.5	Petrol Diesel	Private vehicles : All Types • new models • existing models • new models • existing models	07/92 → 01/93 → → 01/96 → 01/97	EU Brussels Directive 93/59 (91/441)	With oxygen sensor and catalytic converter for petrol vehicles. With catalytic converter and EGR for diesel vehicles.

EMISSION STANDARDS							ALL TYPES
STANDARD				APPLICATION		NOTES	CHARACTERISTICS
E.E.C.	PSA		Engines	Vehicles	Applicable		
	A-S	RP					
EURO 1 **(EURO 93)**	W2	CEE W2	Petrol Diesel	Utility vehicles : < 3.5 tonnes • new models • existing models Class 1 : • new models • existing models Class 2/3 : • new models • existing models	 01/10/93 → 01/10/94 → → 01/97 → 10/97 → 01/98 → 10/98	Brussels directive 93/59 → 3 classes depending on vehicle weight : Class 1 < 1250 kg Class 2 : 1250/1700 kg Class 3 > 1700 kg	With oxygen sensor and catalytic converter for petrol vehicles
EURO2 **(EURO 96)**	L3	CEE 95	Petrol Diesel	Private vehicles : < 6 seats and < 2.5 tonnes • new models • existing models	 01/96 → 01/97 →	Brussels directive 94/12 → EURO 93 standard made stricter	With oxygen sensor and reinforced catalytic converter for petrol vehicles. With catalytic converter and EGR for diesel vehicles.

ALL TYPES			EMISSION STANDARDS				
STANDARD				APPLICATION		NOTES	CHARACTERISTICS
E.E.C.	PSA		Engines	Vehicles	Applicable		
	A-S	RP					
EURO 2 **(EURO 96)**	W3	CEE 95	Petrol Diesel Gas	Utility vehicles : < 3.5 tonnes Class 1 : • new models • existing models Class 2/3 : • new models • existing models	 01/97 → 10/97 → 01/98 → 10/98 →	Brussels directive 96/69 → 3 classes depending on vehicle weight : Class 1 < 1250 kg Class 2 : 1250/1700 kg Class 2 : 1 700 kg	With oxygen sensor and reinforced catalytic converter for petrol vehicles. With catalytic converter and EGR for diesel vehicles.
EURO 3 **(EURO 2000)**	L4	CEE 2000	Petrol Diesel Gas	Private vehicles : All Types • new models • existing models	→ 01/2000 → 01/2001	Brussels directive 98/69 → EURO 2 standard (L3) made stricter → Fiscal incentives	With 2 oxygen sensors and catalytic converter for petrol vehicles. With catalytic converter and EGR for diesel vehicles.With EOBD on-board diagnosis.

EMISSION STANDARDS							ALL TYPES
STANDARD				APPLICATION		NOTES	CHARACTERISTICS
E.E.C.	PSA		Engines	Vehicles	Applicable		
	A-S	RP					
EURO 3 **(EURO 2000)**	W3		Petrol Diesel Gas	Utility vehicles : < 3.5 tonnes Class 1 : • new models • existing models Class 2/3 : • new models • existing models	 → 01/2000 → 01/2001 → 01/2001 → 01/2002	Brussels directive 98/69 → EURO 2 standard (L3 made stricter → Fiscal incentives → 3 classes depending on vehicle weight : Class 1 < 1305 kg Class 2 : 1305/1760 kg Class 2 : 1760 kg	With 2 oxygen sensors and catalytic converter for petrol vehicles. With catalytic converter and EGR for diesel vehicles. With EOBD on-board diagnosis.
EURO 4	IF/ L5 EOBD		Petrol	Private vehicles : All Types • new models • existing models diagnostic embarqué	 → 01/2001 → 01/2003	Brussels directive 98/69 → EURO 3 standard (L4)) made stricter → Fiscal incentives	With 2 oxygen sensors and catalytic converter for petrol vehicles. With EOBD on-board diagnosis.

SAFETY REQUIREMENTS : PETROL/LPG DUAL FUEL SYSTEM

ESSENTIAL : Special precautions should be taken when dealing with gas powered systems

SAFETY REQUIREMENTS.

Only personnel who have been specially trained to work with **petrol/LPG DUAL FUEL** vehicles are authorised to carry out repairs to the **DUAL FUEL** system.

- Ensure that these qualified personnel are provided with acrylic-free overalls *(risk of static electricity).*

In the event of a major gas leak

- Isolate the vehicle in the open air, away from any buildings.

- Call the emergency services *(police and fire brigade)* should the situation get out of hand.

PRECAUTIONS TO BE TAKEN BEFORE CARRYING OUT ANY REPAIR WORK

Any work on a gas powered vehicle must be carried out in a ventilated area.
Disconnect the battery negative terminal.
Ensure the vehicle is connected to earth.

Ensure the vehicle is kept away from the following hazards :
- Sparks.
- Flames.
- Slow combustion *(lit cigarette).*

Drain the fuel tank using "flare" type material (following the instructions for this material) before performing one of the following operations :
- Remove the gauge valve.
- Working on the fuel tank.

Before removing the fuel tank or working on the gas circuit located downstream of the safety electrovalve (on the gauge valve), perform the following operations :
- Close the safety electrovalve.
- Switch the engine to use gas.
- Wait for the engine to stop due to lack of fuel.

After each operation, check that the circuit is sealed using one of the following systems :

- Electronic detector .
- Soapy water.
- Any other leak detection product.

Remove the fuel tank when the vehicle is to be subject to high temperatures (above 50oC) (spray booth).
Do not clean the engine compartment with a high pressure device and do not use detergents.

ALL TYPES	SPECIFICATIONS : PETROL/LPG DUAL FUEL SYSTEM

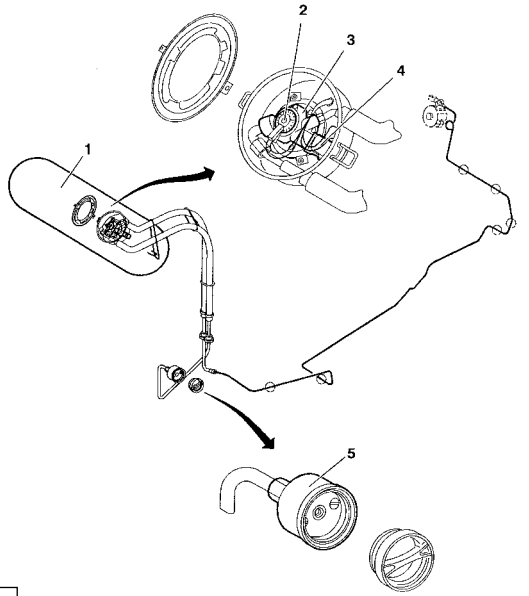

B1HPOQ4P

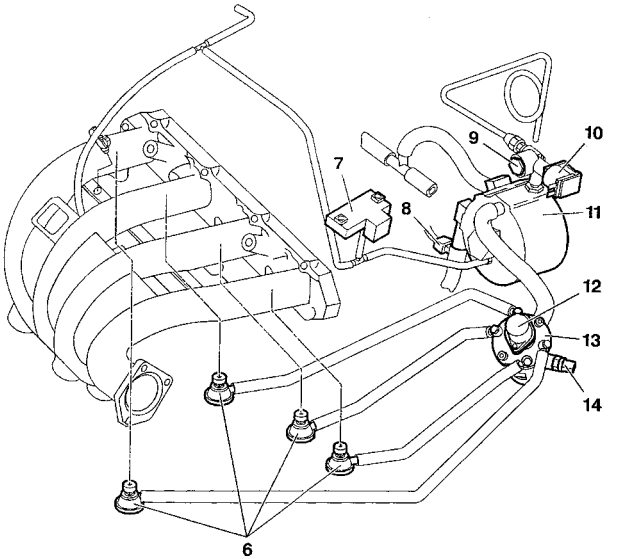

B1HPOQ5P

SPECIFICATIONS : PETROL/LPG DUAL FUEL SYSTEM — ALL TYPES

1) Fuel tank
- Capacity : **70 litres.**
- Max. pressure : during tests / in operation : **30 bars / 20 bars**.
- Max. operating temperature : **50°C**.
- *Location : in the boot.*

2) Fuel gauge
- Supply voltage : **12 volts**.
- Resistance : **0 to 15** ohms empty, **280 to 315 ohms** full.
- *Location : on the gauge valve.*

3) LPG gauge valve.
- *Location : on the fuel tank.*

4) Safety electrovalve.
- Supply voltage : **12 volts**.
- Power : **8W**.
- resistance : **18 ohms**.
- *Location : on the gauge valve.*

5) Filler orifice with safety valve.
- *Location : on the rear right wing.*

6) Injectors and valves.
- *Location : in the engine compartment, under the air manifold.*

7) Pressure sensor.
- Ssupply voltage : **5 volts**.
- *Location : on the evaporator control valve support.*

8) Temperature sensor 15°C.
- *Location : on the control valve reheating circuit.*

9) LPG filter.
- Type : paper.
- Replacement intervals: every **37,500 miles**.
- *Location : on the evaporator control valve inlet union.*

10) Supply electrovalve.
- Supply voltage : **12 volts**.
- Power : **8W**.
- Resistance : **18 ohms**.
- *Location : on the evaporator control valve inlet union.*

11) Evaporator control valve.
- Make : **NECAM**.
- Typt : **MEGA**.

ESSENTIAL :

Before checking and setting the pressure, it is essential that you read through and follow closely BROCHURE : BRE 0332.

Setting pressure - 1st stage.

- Pression de réglage vaporisateur-détendeur neuf :

● **1450 ± 50 mb.**

- Pression de réglage vaporisateur-détendeur ayant déjto servi :

● **1400 ± 50 mb**.

Setting pressure - 2nd stage.

- Setting pressure for a new evaporator control valve :

● **- 970 ± 10 mb**

- Setting pressure for a used evaporator control valve :

● **- 960 ± 10 mb**

12) Stepper motor
- Location : on the distributor.

13) Distributor.
- Location : on the evaporator control valve support.

14) Distributor electrovalve.
- Supply voltage : **12 volts**.
- Resistance : **25 ohms**.

Engines : RHZ - RHY

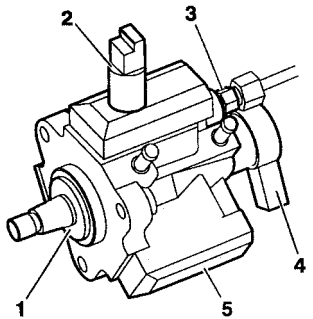

B1HP12CC

Cleaning.
- The use of high pressure cleaners is prohibited.
- Do not use compressed air.

Fuel supply circuit.
- Required fuel : diesel.

WARNING : Do not use other fuels.

Electric circuit.
- Swapping injection ECUs between two vehicles will render it impossible to start either vehicle.
- It is forbidden to supply a diesel injector with **12 volts**.

High pressure fuel pump.
Do not separate the following components from the high pressure fuel pump **(5)** :
- High pressure fuel pump third piston deactivator **(3)** *(no replacement parts).*
- High pressure fuel regulateur **(4)** *(no replacement parts).*
- Sealing ring **(1)** *(no replacement parts).*
- High pressure outlet connector **(3)** *(will cause a malfunction).*

PROHIBITED OPERATIONS: HDI DIRECT INJECTION SYSTEM

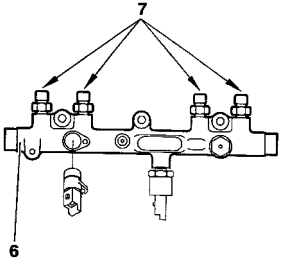

B1HP12DC

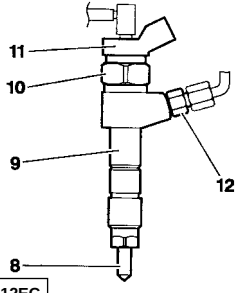

B1HP12EC

Engines : RHZ - RHY

High pressure fuel injection common rail.

- Do not separate the connectors **(7)** from the common injection rail **(6)** *(malfunction).*

Diesel injectors.

WARNING: Diesel and ultrasonic cleaners are prohibited.

Do not separate the following components from the diesel injector carrier **(9)** :

- Diesel injector **(8)** *(no replacement parts).*
- Electromagnetic element **(11)** *(destruction)*.
- Do not alter the position of the nut **(10)** *(malfunction).*
- Do not separate the connector **(12)** from a diesel injector.
- It is forbidden to clean the carbon deposits from the diesel injector nozzle.
- Identification : Injector carrier.

There are **2 types** of diesel injector carrier classed according to fuel flow.

Identification by engraving or paint mark

Injector carrier	Engraving	Paint mark	Location
Class 1	**1**	**Blue**	On the upper part of the coil near to the fuel return aperture
Class 2	**2**	**Green**	

Identification markings:

- **"a"** : Supplier identification.
- **"b"** : PSA identification number.
- **"c"** : Class identification.

IMPERATIVE: When replacing a diesel injector carrier, order a component of the same class.

(See repair manual).

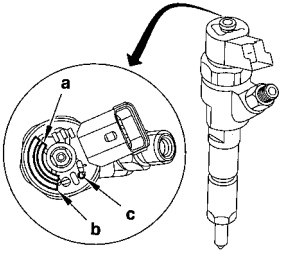

B1HP16PC

SAFETY REQUIREMENTS

Preamble.

All interventions on the injection system must be carried out to conform with the following requirements and regulations :
- Competent health authorities.
- Accident prevention.
- Environmental protection.

WARNING : Repairs must be carried out by specialised personnel informed of the safety requirements and of the precautions to be taken.

Safety requirements.

IMPERATIVE : Take into account the very high pressures in the high pressure fuel circuit (1350 bars), and respect the requirements below :
- No smoking in proximity to the high pressure circuit when work is being carried out.
- Avoid working close to flame or sparks.

Engine running :
- Do not work on the high pressure fuel circuit.
- Always stay clear of the trajectory of any possible jet of fuel, which could cause serious injuries.
- Do not place your hand close to any leak in the high pressure fuel circuit.

After the engine has stopped, wait 30 seconds before any intervention.

NOTE : This waiting time is necessary in order to allow the high pressure fuel circuit to return to atmospheric pressure.

CLEANLINESS REQUIREMENTS.

Preliminary operations

IMPERATIVE : The technician should wear clean overalls.

Before working on the injection system, it may be necessary to clean the apertures of the following sensitive components : *(refer to corresponding procedures).*
- Fuel filter.- High pressure fuel pump.
- High pressure fuel injection common rail.
- High pressure fuel pipes.
- Diesel injector carriers.

IMPERATIVE : After dismantling, immediately block the apertures of the sensitive components with plugs, to avoid the entry of impurities.

Work area.
- The work area must be clean and free of clutter.
- Components being worked on must be protected from dust contamination.

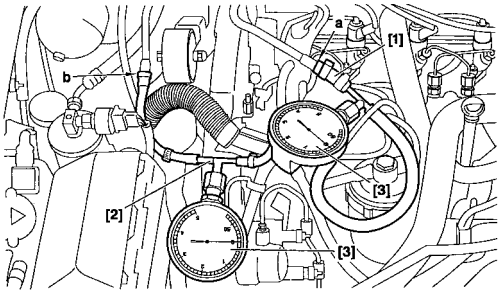

B1BP1TWD

Engines : RHZ - RHY

TOOLS

[1] Ø 10 mm low pressure connector	: **4215-T**	
[2] Ø 8 mm low pressure connector	: **4218-T**	
[3] Pressure gauge for testing boost pressure	: **4073-T**	**Kit 4073-T**

Connect the tool **[1]** between the booster pump and the fuel filter *(white mark at **"a"** on the fuel supply pipe).*
Connect the tool **[2]** downstream of the diesel injectors, between the high pressure fuel pump and the fuel filter *(green mark at **"b"** on the fuel return pipe).*

WARNING : Any check of pressure downstream of the fuel filter is

PROHIBITED.Checks on pressure : static.

- Switch on ignition

For **3 seconds** *(normal functioning)* :
- Fuel supply pressure shown by the pressure gauge **[3] = 1.8 ± 0.4 Bar**.
- Fuel return pressure shown by the pressure gauge **[3] = 0.5 ± 0.4 Bar**.

Engines : RHZ - RHY (continued)

Checks on pressure : dynamic.
Engine running, at idle **(normal functioning):**
- Fuel supply pressure shown by the pressure gauge **[3] = 2 ± 0.4 Bar.**
- Fuel return pressure shown by the pressure gauge **[3] = 0.7 ± 0.4 Bar.**

Abnormal functioning

Fuel supply pressure	Fuel return pressure	Checks
Between **3** and **3.5 Bar**	**0.7 ± 0.2 Bar**	Check the condition of the diesel filter
More than **3.5 Bar**	Less than **0.7 Bar**	Check the low pressure regulator incorporated in the filter *(locked shut)* : replace.
More than **3.5 Bar**	More than **0.7 Bar**	Check the fuel return circuit *(pipe pinched or trapped...).*
Between **0.8** and **1.5 Bar**	Less than **0.7 Bar**	Check the fuel suppy circuit : - Booster pump *(low pressure),* piping.

Impossible to start the engine :
Fuel supply pressure less than **0.8 Bar** :
- Check the low pressure regulator incorporated in the filter (locked open).
- Check the high pressure pump distribution valve *(locked shut)*.

Check : diesel injector return flow. *(Table below)*

Uncouple the diesel injector return pipe.

Check :	Observe :
The flow should be drop by drop.	Diesel injector functioning correctly.
Excessive fuel return.	Diesel injector locked shut.

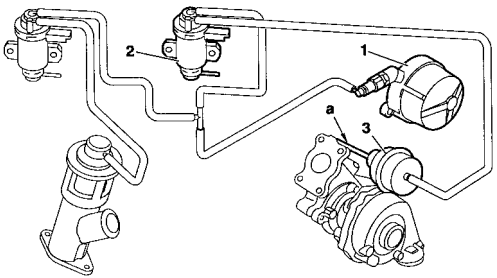

B1HP12FD

Engines : RHZ - RHY

TOOLS

[1] Manual vacuum pump : FACOMM DA 16.

IMPERATIVE : Respect the safety and cleanliness requirements.

Vacuum pump.

- Connect the tool **[1]** on the vacuum pump **(1)**.
- Start the engine.
- Pressure should be **0.8 bar** at **780 rpm**.

Boost pressure regulator electrovalve.

- Connect the tool **[1]** between the electrovalve **(2)** and the valve **(3)** of the boost pressure regulator.

Compare readings with the values in the table below.

Engine speed (rpm)	Pressure (Bar)
780	0.6
4000	0.25

Pressure regulator valve.

- Connect the tool **[1]** on the valve **(3)**.
- Appy a pressure of **0.5 bar** to activate the rod **"a"** :
- Rod **"a"** should be moved **12 mm**.

XANTIA - SYNERGIE | CHECKS : TURBO PRESSURE

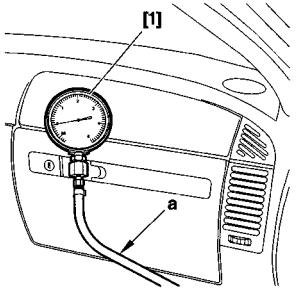

C5FP06RC

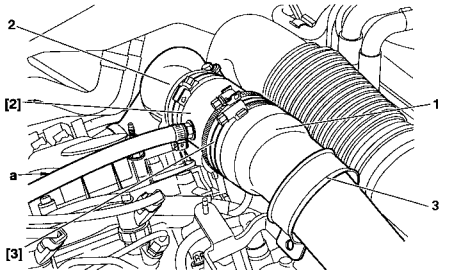

B1HP12JD

Engine : RHZ

TOOLS

[1] Pressure gauge for checking boost pressure	**: 4073-T.A Kit 4073-T**
[2] Sleeve for checking boost pressure	**: 4185-T**
[3] Adaptor sleeve	**: 4229-T**

Checks.

IMPERATIVE : respect the following checking requirements : Engine at running temperature. Vehicle in running order at full load.

Preparation.

- Remove the collar fixing **(3)**.
- Insert the tool **[2]** connected with tool **[3]**, between the pipe **(1)** and the duct **(2)**.
- Position tool **[1]** in the vehicle.
- Connect the sleeve [**2]** to the tool **[1]** with its tube **"a"**.

Procedure.

- Start the engine.
- Engage first gear and start the engine.
- Engage the gears up to third gear.
- Decelerate to **1000 rpm**.
- Accelerate hard, and check the pressure : **0.6 ± 0.05 Bar *(1500 rpm)***.
- Accelerate freely in kick-down, *(changing from fourth to third gear).*
- Check the pressure : **0.95 ± 0.05 Bar** *(between **2500** and **3500 rpm**).*
- Remove the tools, reposition the pipe **(1)** and refit the collar **(3)**.

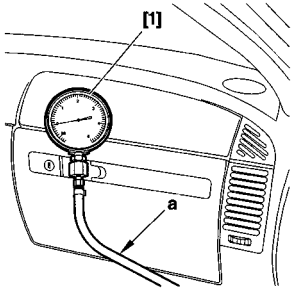

C5FP06RC

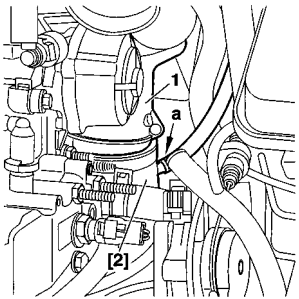

B1BP20MC

Engine : RHY

TOOLS

[1] Pressure gauge for checking boost pressure	**: 4073-T.A Kit 4073-T**
[2] Sleeve for checking boost pressure	**: 4185-T**

Checks.

IMPERATIVE : respect the following checking requirements : Engine at running temperature. Vehicle running at full load.

Preparation.

- Remove the collar **(3)** and the sleeve.
- Insert the tool **[2]** between the pipe **(1)** and the duct **(2)**.
- Position tool **[1]** in the vehicle.
- Connect the pressure gauge **[1]** to the tool **[2]** with its tube **"a"** long enough for the gauge to be positioned inside the vehicle.

Procedure.

- Start the engine.
- Engage first gear and start the engine.
- Engage the gears up to third gear.
- Decelerate to **2000 rpm**.
- Gradually accelerate.
- Check the pressure : **0.95 ± 0.05 Bar.**
- Remove the tools.

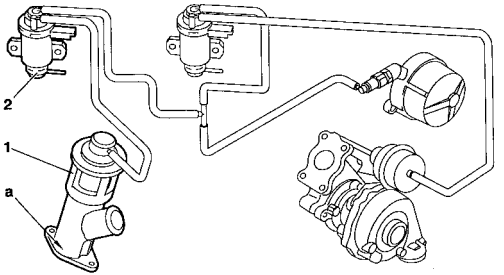

B1HP12GD

Engines : RHZ - RHY

TOOLS

[1]] Manual vacuum pump : FACOMM DA 16.

IMPERATIVE : Respect the safety and cleanliness requirements.

EGR valve

- Connect the tool **[1]** to the capsule union **(1)**.
- Apply, several times in succession, a vacuum of approx. **0.6 bar** to activate the rod **"a"**.
- In abrupt reaction to the vacuum, the valve should close on its seating with a clicking noise.

Exhaust gas reycling (EGR) electrovalve.

- Check, not under load, between the electrovalve **(2)** and the EGR valve **(1)**.
- Connect the tool **[1]** between the electrovalve **(2)** and the capsule **(1)**.
- Compare readings with the values in the table below.

Engine speed (rpm)	Pressure (Bar)
780	0.5
2500	0

SPECIFICATIONS OF THE DELPHI DIESEL INJECTION PUMP								ALL TYPES
				PUMP - TYPE - REFERENCE				
Emission standards				L3				
Equipment							Compacted (1)	Acoustic (2)
XM	X U D	11 BTE	P8C				XUDLP01 R 8640 A 051 A	
SYNERGIE								XUDLP01 R 8640 A 102 A

(1) = Without acoustic bonnet.
(2) = With acoustic bonnet and foam.

ALL TYPES	SPECIFICATIONS OF THE DELPHI DIESEL INJECTION PUMP											
Engine type	Pump Type Reference	Static timing Initial advance Compression Time (cylinder N° 4)	Dynamic timing checking (at idle)	Reference		Colour code	Injector needle lift pressure Bar)	Adjustments (rpm)			Max. speed	
				Injector	Injector holder + injector			Fast idling	Anti-stall	Idling	Unladen rpm	Laden rpm
P8C	**XUDLP01** **R 8640A/***	Crankshaft TDC hole pump pre-positioned by pegging		6751 H	002R01AE2 6734 302H	ORANGE	163.5±3.5	**NOT ADJUSTABLE**				

(a) : **850** $^{+0}_{-50}$ with aircon - (*) See table on page : **153**.

SETTING THE DELPHI ELECTRONIC INJECTION PUMP

XM

Engine : P8C

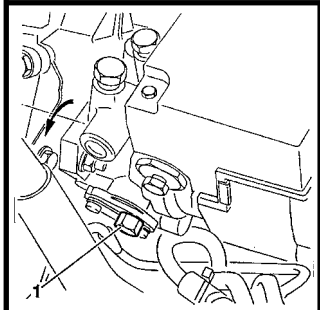

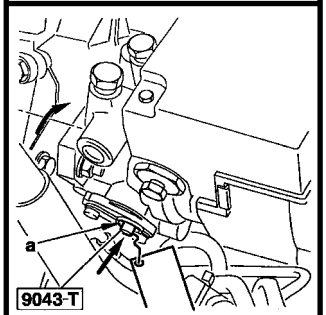

TOOLS

- Flywheel locating peg	: **7017-T.J**	**Kit 7004-T**
- **EPIC** injection pump setting rod	: **9043-T**	**Kit 4123-T**

SETTING THE PUMP

NOTE : This operation is a pre-positioning of the injection pump.

- Peg the flywheel.
- Tilt the pump towards the outer section of the engine.
- Remove the plug **(1)**.
- Introduce the peg **9043-T** into the orifice **"a"**.
- Turn the pump towards the inner section of the engine, pushing locating peg **9043-T** fully home.
- Tighten the front and rear nuts of the pump to **2 m.daN**.
- Remove the tools.
- Refit the plug **(1)**. Tighten to **0.5 m.da**N.

NOTE : No adjustment of the pump controls *(managed by the ECU).*

B1HP0BBC | B1HP0NRC

XM	FITTING DELPHI DIESEL INJECTORS

Engine : P8C

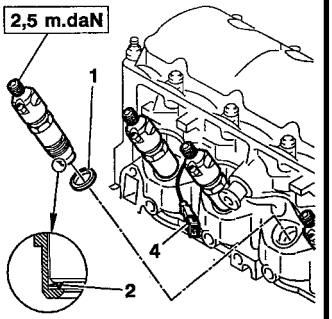

B1HPOYHC

B1HPOYJC

Fitting an injector

The copper seal **(1)** and the fire seal washer **(2)** are to be replaced each time they are removed.

NOTE : Fitting parts of different makes is **PROHIBITED**.

WARNING : Ensure that the fire seal washer **(2)** is fitted the right way round.

- The needle-lift injector **(4)** is positioned on the cylinder **No. 3**.

WARNING : Should the needle lift sensor fail to operate, the complete injector holder must be replaced.

IMPERATIVE : Do not reset the injector holder **(4).**

Tighten the injector holder on the cylinder head to :

9 m.daN

[1] Tool to remove/refit injectors **(2) 7007-T**
[2] 7008-T.A Tool kit 4123-T

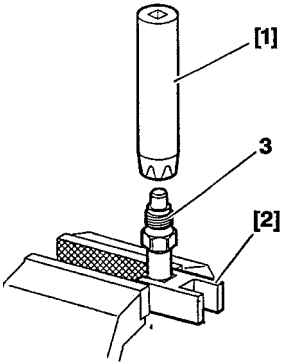

(3) Tighten lightly to prevent any distortion: **1 m.daN + 20°** or **6 m.daN**.

B1HPOYGC

SPECIFICATIONS OF THE BOSCH INJECTION PUMP												ALL TYPES
				PUMP - TYPE - REFERENCE								
Emission standards				L3								
Equipment				Automatic gearbox	ADC 7 keys	Transponder	ADC II	Damper	ADC Damper	Aircon Damper		
XANTIA SYNERGIE	X U D 9	BTF	DHX	XUDBP02 R 601/3	XUDBP02 R 601/2	XUDBP02 R 601/5	XUDBP02 R 601/5					
XM	D K 5	ATE	THY									VP36535 VER 520
XANTIA SYNERGIE	D W 10	TD	RHY	CP1 (*)								
		ATED	RHZ									

(*) = The fuel high pressure is driven by the timing belt.

ALL TYPES	SPECIFICATIONS OF THE BOSCH INJECTION PUMP											
Engine type	Pump Type Reference	Static timing (1) Initial advance Compression Time (cylinder N° 4)	Dynamic timing checking (at idle)	Reference		Colour code	Injector needle lift pressure (Bar)	Adjustments (rpm)			Max. speed	
				Injector	Injector holder + injector			Fast idling	Anti-stall	Idling	Unladen rpm	Laden rpm
DHX	**XUDBP02 VE R 601 / ***	Pump 0.57 mm ABDC		299C	KCA 17S92	GREEN	175 +50 - 0	**(2)** 950 ± 50	1500 ± 100 + 3 mm shim	**(3)** 800 +0 -50	5100 ± 80	
RHY RHZ	**CP1**	Non adjustable		96255 42580								
THY	**VP 36 535 VE R 520 / ***	No setting : managed by ECU		KCE 30S5	312	YELLOW	170 +5 -0					
				Cylinder N° 3				ADJUSTABLE WITH DIAGNOSTIC TOOL				
				KCE 30S5	316	NONE						

(1) Engine : Trou de Pige **P.M.H** - **(2)** Clearance at the fast idle control **1 mm**

(3) 850 = +0-50 with air conditioning**.** - ***See table on page : **157**

NOTE : For all pumps on 1.9TD engines with a "B" index : the static timing is 0.82 mm (instead of 0.66 mm)

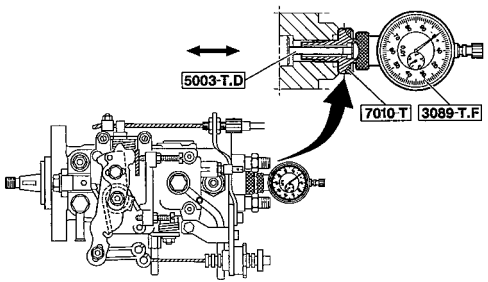

B1HPOYKD

Engine : DHX

TOOLS

- Flywheel locating peg	: **7017-T.R.**	**Kit 7004-T**
- Ring spanner	: **4132-T.**	
- Crescent spanner **FACOM 57**	: **11 X 13**	**Kit 4123-T.**
- Dial gauge	: **3089-T.H.**	
- Dial gauge bracket	: **7010.T.**	
- 31 mm lever	: **5003-T.D.**	

SETTING THE INJECTION PUMP

-Tilt the pump in the retarded direction *(away from the engine).*
- Fit the timing tool.
- Turn the engine (direction of engine rotation) until the peg engages in the flywheel.
- Ensure that the pump pinion can be pegged *(if not, rotate the crankshaft by **1 turn**).*
- Remove the tool **7017-T.R**.
- Find the **B.D.C.** position of the pump *(by turning the crankshaft backwards)* and set the dial gauge to **"0"**.
- Turn the crankshaft *(direction of engine rotation)* until locating peg **7017-T.R** engages.
- Turn the pump, in the advance direction *(towards the engine)* until the dial gauge shows (See the table on page : **158**).

NOTE : The dial gauge needle must not move when tightening.

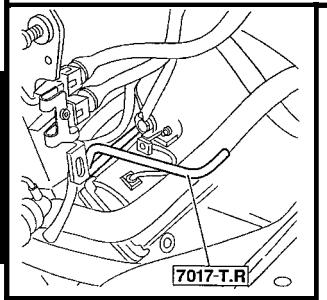

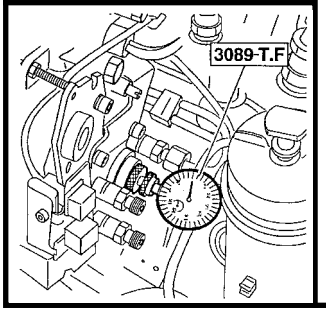

CHECKING THE INJECTION PUMP SETTING

- Remove the tool **7017-T.R**.
- Rotate the crankshaft by **1/4 of a turn** *(opposite direction of rotation).*
- Rotate the crankshaft *(direction of rotation)*.
- Peg the flywheel.
- In this position, the dial gauge should show the value **"X"** (See the table on page : **158**).
- The value **"X"** corresponds to the travel of the pump piston in relation to the **B.D.C**.
- Remove the tool.

B1HP0NQC | B1HP0NPC

Engine : DHY

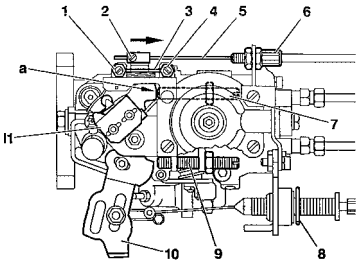

B1HP0YLD

Engine cold.
- Check the fast idle speed.
- Ensure that the lever **(3)** is against its screw stop **(1)** by pushing it in the direction of the arrow ➔ . If not, adjust with the cable clamp **(2)**, and then the cable tightener **(6)**.

Engine hot.
- Ensure that the cable **(9)** is slack.
- Engine stopped : fully depress the accelerator pedal, check that the lever **(8)** is against its stop **(7)**. If not, move the position of the spring clip **(B)**.

Adjusting the idle speed.
- Loosen the screw **(5)** until there is no longer any contact with the end of the screw.
- Move the screw **(4)** to obtain an engine speed of (see the table on page: **158**).

Adjusting the residual output.
- Insert a shim **"A"** of (see the table on pages **158**), between the lever **(8)** and the screw **(5)**. Adjust the screw **(5)** to obtain a speed of (see the table on page **158**).

Adjusting the fast idle speed.
- Place the lever **(3)** against the screw **(1)** and turn the screw to obtain an engine speed of (see table on page **158**) .
- Check the operation of the manually-operated **"STOP"** control.

Adjusting the throttle lever switch (C).
- The contacts will open for an accelerator cable travel of **11 mm** or a clearance of **8.5 mm** at **A".**

XANTIA - SYNERGIE	FITTING BOSCH INJECTORS

Engines : RHY - RHZ

Evolution : Classification of diesel injector carriers

16/11/98 ➔

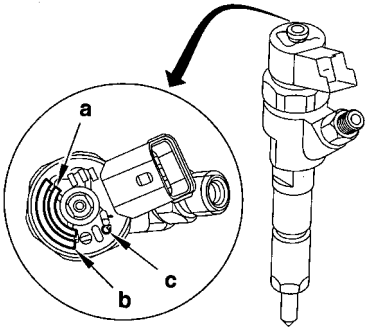

B1HP16PC

Reminder : RHY and **RHZ** are equipped with **4** diesel injector carriers marked according to their injection duct diameters *(flow of diesel fuel)*.

Identification.
The injector carriers have an engraving or paint mark on the upper part of the coil, close to the diesel fuel return aperture

Mark **1 = BLUE** paint mark = Injector class **1.**
Mark **2 = GREEN** paint mark = Injector class **2.**

Identification marking:
a : Supplier identification.
b : PSA identification no.
c : Identification of class.

After Sales operations.

ESSENTIAL : When changing a diesel injector carrier, order a component of the same class.

➔ **15/11/98** (RPO No.) *(injector carrier without marking)*, **always order a class 2 injector carrier.**

Engine : THY

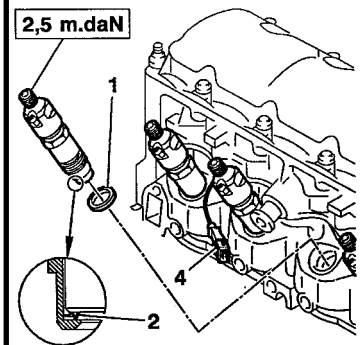

B1HPOYHC

B1HPOYJC

Fitting an injector.

The copper seal **(1)** and the fire seal washer **(2)** are to be replaced each time they are removed.

NOTE : Fitting parts of different makes is **PROHIBITED**.

WARNING : Ensure that the fire seal washer **(2)** is fitted the right way round

The needle lift type injector **(4)** is located on **cylinder No. 3.**

WARNING : Should the needle lift sensor fail, the injector holder assembly must be replaced.

IMPERATIVE: Do not reset the pressure of the injector holder **(4).**

Tighten the injector holder on the cylinder head to : 4.5 m.daN.

[1] Injector spanner **77510-T**
[2] 7008-T **Kit 4123-T**

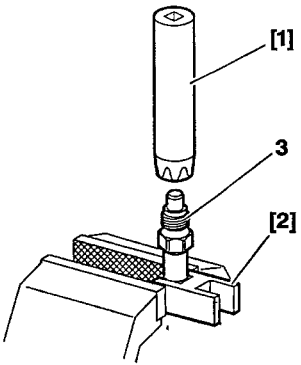

(3) Tighten lightly to avoid distortion.
Tighten to: **7 m.daN**.

B1HPOYGC

ALL TYPES	SPARKING PLUGS						
Vehicles - Models		Engine type	BOSCH	CHAMPION	SAGEM	Electrode gap setting	Tightening torque
XANTIA	1.6i	BFZ	FR7DE	RC8YCL	RFC58 LZ	0.9 mm	**2.5 mdaN**
	1.8i	LFX					
	1.8i 16v	LFY					
	2.0i 16v	RFV					
	3.0i V6	XFZ	FR 8 KDC	PFR 6 E -10		1 mm	**10 Nm+90° (*)**
XM	2.0i 16v	RFV	FR7DE	RC8YCL	RFC58 LZ	0.9 mm	**2.5 mdaN**
	2.0i TcT	RGX					
	3.0i V6	XFZ	FR 8 KDC	PFR 6 E -10		1 mm	**10 Nm+90°***
SYNERGIE	2.0i 16v	RFN	FR7DE	RC8YCL	RFC58 LZ	0.9 mm	**2.5 mdaN**

***** : Retightening => 2.5 mdaN

An E.E.C. decree of **25 June 1976,** regulates the speed displayed by the speedmeter in relation to the actual speed travelled.

This decree stipulates :

- The speed indicated by a speedometer must never be lower than the actual vehicle speed.
- Between the speed displayed **«SD»** and the speed travelled **«ST»**, there must always be the following relationship :

ST < SD < 1.10 ST + 4 Kph

Example : For an actual speed of **100 Kph** the speed displayed by the speedometer may be between **100** and **114 Kph**.
The speed indicated by the speedometer may be influenced by :

- The speedometer.
- The tyres fitted to the vehicle.
- The final drive ratio.
- The speedometer drive ratio.

Any of these components can be checked without removing them from the vehicle. (See information note **N° 78-85 TT of 19 October 1978**.

NOTE : Before replacing the speedometer, check the conformity of the following points :
- The tyres fitted to the vehicle.
- The gearbox final drive ratio.
- The speedometer drive ratio.

ALL TYPES	CLUTCH SPECIFICATIONS					
	XU					
	5	7				10
	JP	JB		JP4		J4R
	All Types					XM Saloon
	1.6i	1.8i		1.8i 16V		2.0i 16V
Engine type	BFZ	LFX		LFY		RFV
Gearbox type	BE3/5					ME/5
Make	LUK	VALEO	LUK	VALEO	LUK	VALEO
Mechanism/Type	200 P 4100	200 CP 4250	200 P 4100	200 CP 4250	200 P 4100	215 DT5250
Clutch disc	200	200 B (D73) 33 AX	200	200 B (D73) 33 AX	200	215 F (D93) 22 BX
Ext./Int. lining Ø	200/134	200/137	200/134	200/137	200/134	215/147
Disc lining type	F 408					F 808

CLUTCH SPECIFICATIONS							ALL TYPES
	EW	XU					ES
	10						9
	J4	J4R		J2TE			J4
	Synergie	XM Estate	Synergie	Xantia	XM	Synergie	All Types
	2.0i 16V			2.0i Turbo CT			3.0i V6
Engine type	RFN	RFV		RGX			XFZ
Gearbox type	BE3/5	ME/5 – ML/5		ML/5	ME/5 – ML/5		ML/5
Make	VALEO			LUK	VALEO		
Mécanisme/Type	230 DING 4700	235 CP 5650		235 T 5700	235 CP 5650		242 DT 6500
Clutch disc	228 D 73 12 R 14 X	228 SH 11 A 15X		228 D	228 D 62 32 BX		242 SH (D31) 11 A 15 X
Ext./Int. lining Ø		235/155		228/155			242/162
Disc lining type	F 808 DS	F 202					F 808

ALL TYPES	CLUTCH SPECIFICATIONS					
	XUD		DW			DK
	11		10			5
	BTF		TD	ATED		ATE
	XM- Synergie RHD	XM LHD	All Types	Xantia	Synergie	All Types
	2.1 TD		2.0 HDi			2.5 TDi
Engine type	P8C		RHY	RHZ		THY
Gearbox type	ME/5-ML/5	ME/5	BE3/5	BE3/5-ML/5	ML/5	MG/5
Make	VALEO		LUK			VALEO
Mechanism/Type	235 CP 5650		230 P 4700	235 T 5700	225 T 5700 **(1)**	242 DT 6500
Clutch disc	228 SH 11 A 15X	228 F (D95) 32 AX	228	228D	225	242 SH (D95) 31 Q
Ext./Int. lining Ø	235/155		230/	235/155	225/	242/162
Disc lining type	F 202		F 408	F 202	F 808	F 206

(1) DVA = Damped double flywheel.

Push-action clutch with automatic adjustment (Non-adjustable) (*)

Engines	**BFZ - LFX - LFY – RFN – RHY**	Gearbox	**BE3/5**

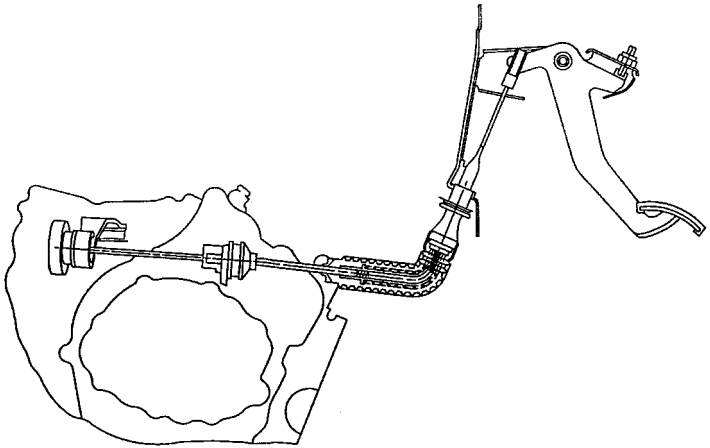

Refitting the clutch cable.

- Set the pedal to the high position (contact at **A**).
- Attach the cable end-piece to the pedal.
- Refit a new clip **(3)** to the pedal.
- Fit the end-piece **(4)** to the bulkhead (**G6** grease).
- Clip the end-piece **(5)** to the gearbox.
- Refit the cable to the lever **(1)**.
- Depress the clutch cable several times to set the assembly in place.
- Check that the end-piece **(4)** is properly fitted to the bulkhead.
- Check the operation of the automatic adjusting device.

1) - Pull the lever *(in direction **F**)*, the lever must move when pulled by hand.

2) - Press the clutch pedal very lightly and repeat the same operation. The lever should not move back.

(*) See pages : **172** to **173**).

B2BP03PD

XANTIA - XM - SYNERGIE	CLUTCH : CHECKS AND ADJUSTMENTS

Pull-action clutch with automatic adjustment (Non-adjustable) (*)

Engines	**Xantia - XM : RFV - DHX**	Gearboxes	**BE3/5**
	XM : RGX		**ME/5**
	Synergie : RFV		**ML/5**

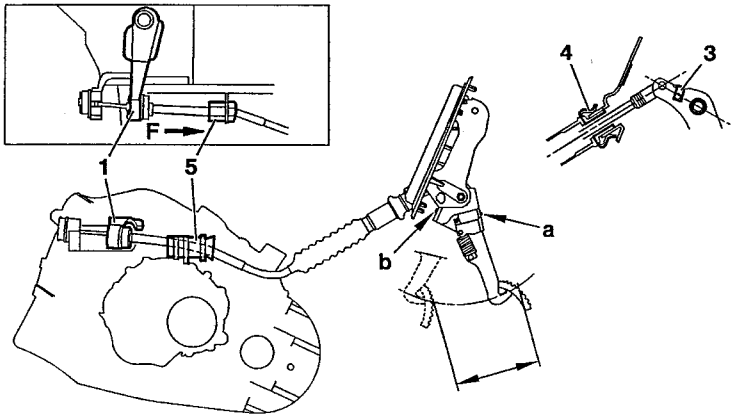

Refitting the clutch cable.

- Set the pedal to the high position (contact at **A**).
- Attach the cable end-piece to the pedal.
- Refit a new clip **(3)** to the pedal.
- Fit the end-piece **(4)** to the bulkhead (**G6** Grease).
- Clip the end-piece **(5)** to the gearbox.
- Refit the cable to the lever **(1)**.
- Depress the clutch cable several times to set the assembly in place.
- Check that the end-piece **(4)** is properly fitted to the bulkhead.
- Check the operation of the automatic adjusting device.

1) Pull the lever (in direction **F**), the lever must move when pulled by hand.

2) Press the clutch pedal very lightly and repeat the same operation. The lever should not move back.

(*) See pages : **172** to **173**).

B2BP03DD

Adjustment of push and pull action clutch with automatic compensation (adjustment of compensation system)

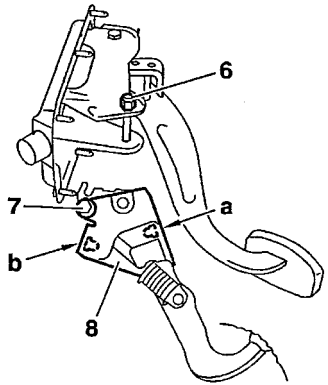

B2BP03EC

Engines : BFZ - LFX - LFY - RFV – RGX - RFN - DHX - RHY - RHZ

WARNING : If a system blockage is detected when checking, or if the pedal has been removed, the pedal position must be adjusted. This position is obtained by the angular displacement of the stop supports **"a"** and **"b"**.

Procedure

- Loosen the nut **(6)** and the screw **(7)**.
- Using a lever, raise the stop support (8) to its highest position.
- In this position, there must be a substantial free play in the pedal.
- Lower the support until there is a free play of **2 ± 1 mm**.
- Tighten the screw **(7)** and the nut **(6)**.
- Check that the outer cable slides freely (at rest, the pedal is against its upper stop **«A»**, the outer cable length should be variable).

Characteristics

- The automatic adjusting device requires no manual adjustment.
- Pedal travel remains constant for all models **145 ± 5 mm**.
- Automatic adjustment is achieved by modifying the curvature of the outer cable.
- Take extra care with the routing of the outer cable, and do not add any supplementary fixing points.

CLUTCH : CHECKS AND ADJUSTMENTS

Engines : BFZ - LFX - LFY - RFV – RGX - RFN - DHX - RHY - RHZ

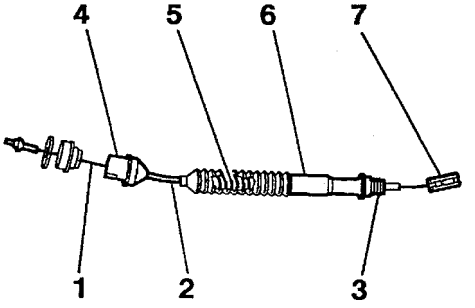

B2BP02SC

NOTE : This cable has an automatic adjusting device which takes up the clutch disc wear and makes up for the compression of the outer cable.

DESCRIPTION

1 - Metallic cable, crimped on both ends.
2 - Outer cable or telescopic duct.
3 - Outer cable stop, bulkhead side *(fixed point on the bodyshell).*
4 - Outer cable stop, gearbox side *(fixed point on the gearbox).*
5 - Tensioning spring ensuring the maximum length of the outer cable.
6 - Wear take up device.
7 - Attaching end-piece.

Engines : BFZ - LFX - LFY - RFV - RGX - RFN - DHX - RHY - RHZ (Continued)

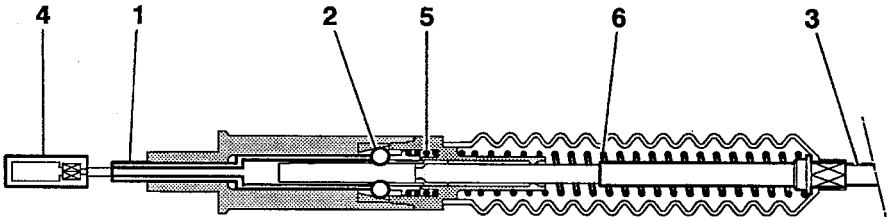

B2BP03QD

Operation	Clutch disengagement phase	Engagement / adjustment phase
For the adjusting device to operate correctly, it is necessary that : The pedal is at rest *(against its upper stop)* The locking sleeve **(1)** is slightly compressed, the rollers **(2)** are free, the outer cable **(3)** length may vary.	As soon as the pedal is applied, the attaching end-piece **(4)** leaves the sleeve **(1)** which moves back. The rollers, pushed by spring **(5)** jam the system. The cable behaves like a conventional cable.	The pedal returns to rest on its upper stop. Attaching end-piece **(4)** pushes sleeve **(1)** which frees the rollers. Outer cable **(3)**, kept extended by the spring **(6)** becomes : - Shorter if the clutch disc is worn. - Longer if the outer cable has been compressed.

NOTE : The pedal gear has a non-adjustable assisting device

XANTIA - XM - SYNERGIE	CLUTCH : CHECKS AND ADJUSTMENTS

Hydraulically operated pull-action clutch (Non-adjustable)

Engines	**XM**	**: RGX -P8C**	Gearboxes	**ME/5**
	Xantia - XM - Synergie	**: RGX - XFZ - RHZ**		**ML/5**
	XM	**: THY**		**MG/5**

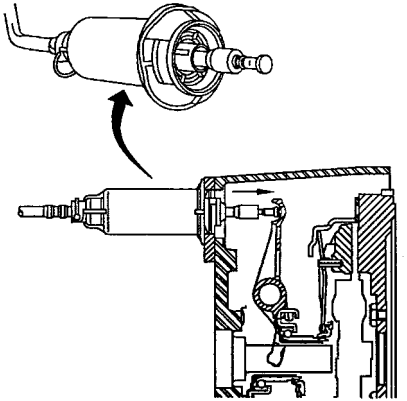

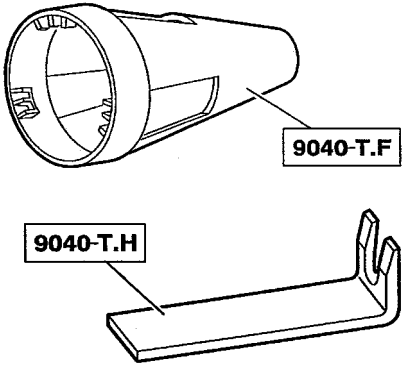

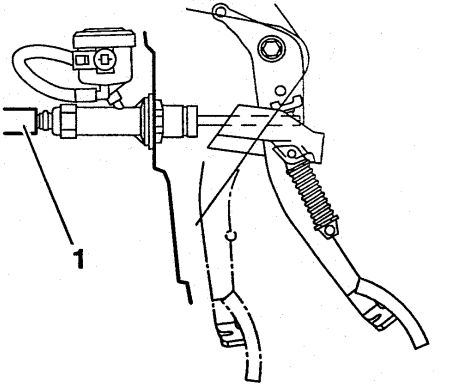

(1) Quick-fit union Tool **9040-T.H.**

B2BP03RC | E5AP14VC | B2BP03SC

Hydraulically operated pull-action clutch (Non-adjustable)

Engines : RGX - XFZ – RHZ - P8C - THY

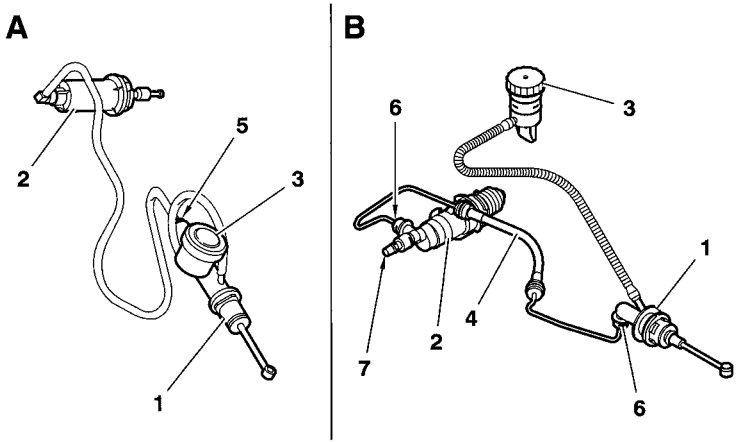

B2BP03ZD

A / Old assembly, supplied complete and filled with hydraulic fluid.
B / New assembly :
- The components supplied separately.
- The circuit is filled with fluid after being fitted to the vehicle.

(1) Clutch transmitter.
(2) Clutch receiver.
(3) Hydraulic clutch control reservoir.
(4) Link pipe.
(5) Click-fit union, sealed (after dismantling).
(6) Click-fit union, non-sealed (after dismantling).
(7) Bleed screw.

Le nouveau montage est composé des pièces suivantes :
The new assembly consists of the the following parts :
- Clutch transmitter, anchored in place after a 1/4 turn.
- Clutch receiver, with push-rod.
- Hydraulic clutch control reservoir, with feed pipe.
- Link pipe, between clutch transmitter and receiver.

Hydraulically operated pull-action clutch (Non-adjustable)

Engines : RGX - XFZ – RHZ - P8C - THY

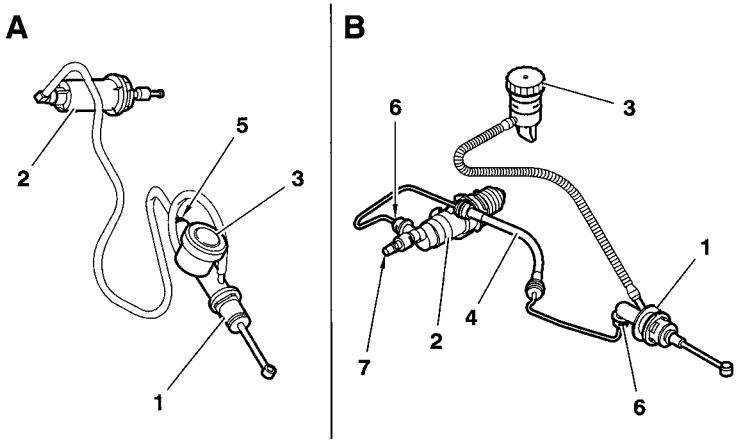

B2BP03ZD

After fitting on the vehicle, the circuit should be filled with a **«DOT 4»** type brake fluid.
Clutch control reservoir capacity **120 cc.**
(Bleeding is carried out not under pressure).

Repair

The new clutch control components are not compatible with the old parts.
Both the old and the new components are marketed by **«Replacement Parts»**.

Draining-Filling - Top-up

- Check the level after each repair visit.
- Fill the circuit *(after drainage)*, using a filling cylinder specifically designed for this operation.
- Use the circuit's bleed screw **(7)**.
- The level of fluid inside the clutch control reservoir should be between the min. and max. marks.

NOTE : Wear on the clutch causes a slight increase in the level of fluid inside the control reservoir.

GEARBOX AND TYRE SPECIFICATIONS							XANTIA
(*) = Long gearbox.	Petrol						
	1.6i	1.8i	1.8i 16V			2.0i 16V	
					Auto.		Auto.
Engine type	BFZ	LFX	LFY			RFV	
Tyres-Rolling circumference	175/70R14 1.85 m	185/65 R14 - 1.815 m			185/65R15 1.895 m	205/55R15 1.85 m	185/65R15 1.895 m
Gearbox type	BE3/5				AL4	BE3/5	AL4
Gearbox ident. plate	20 TD 00	20 TB 94	20 TB 95	20 TB 95 (*)	20 TP 52	20 TB 97	20 TP 53
Reduction box torque	15X64	19X75	19X79		23X73	19X79	23X73
Speedometer ratio	22X18			28X18	20X16	22X18	20X16

(1) = Plastic pinion	Petrol			Diesel		
	2.0i Turbo CT	3.0i V6		1.9 TD	2.0 HDi	
			Auto.	Auto.		
Engine type	RGX	XFZ		DHX	RHY	RHZ
Tyres-Rolling circumference	205/60 R15 - 1.92 m			205/60R15 - 1.92m	205/60 R15 - 1.92 m	
Gearbox type	ML/5		4 HP 20	AL4	BE3/5	ML/5
Gearbox ident. plate	20 LE 90	20 LE 89	20 HZ XX	20 TP 50	20 TB 53	20 LE 84
Reduction box torque	15X67	16X69	20X69	25x71	19X75	16X65
Speedometer ratio	25X20 (1)		20X16	20x16	22X18	25X20 (1)

XM	GEARBOX AND TYRE SPECIFICATIONS					
	Petrol					
	2.0i 16V		3.0i V6		2.0i Turbo CT	
		Auto.		Auto.		Auto.
Engine type	RFV		XFZ		RGX	
Tyres-Rolling circumference	195/65R15 - 1.93 m		205/65R15 - 1.97 m			
Gearbox type	BE3/5	4 HP 18	ML/5	4 HP 20	ME/5	4 HP 18
Gearbox ident. plate	20 TD 01	20 GZ 5G	20 LE 59	20 HZ YY	20 GM 33	20 GZ 1G
Reduction box torque	14X62	18X77	17X71	20X69	14X59	18X77
Speedometer ratio	22X18	25X20	25X20	20X16	21X26 **(1)**	25X20

(1) = Plastic pinion	Diesel		
	2.1 TD		2.5 TD
		Auto.	
Engine type	P8C		THY
Tyres-Rolling circumference	195/65R15 - 1.93 m		205/65R15 - 1.97 m
Gearbox type	ME/5	4 HP 18	MG/5
Gearbox ident. plate	20 GM 31	20 GZ 5D	20 KM 70
Reduction box torque	15X59	18X77	16X65
Speedometer ratio	21X26 **(1)**	25X20	16X20 **(1)**

GEARBOX AND TYRE SPECIFICATIONS				SYNERGIE
	Petrol			Diesel
	2.0i 16V		Auto.	2.0 HDi
Engine type	RFN			RHY
Tyres-Rolling circumference	205/65 R15 - 1.97 m			
Gearbox type	BE4/5		AL4	ML/5
Gearbox ident. plate	20 DL 26	20 DL 27	20 TP 31	20 LE 91 **(*)**
Reduction box torque	14x62		21x73	15x67
Speedometer ratio	18x14		20x16	25x20

(*) DVA = Double damped flywheel

XANTIA- XM	BE3/5 GEARBOX

Engines : BFZ - LFX - LFY - RFV 03 - RHY

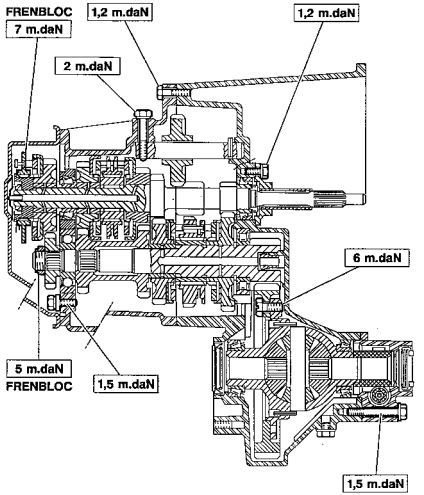

B2CP34JP

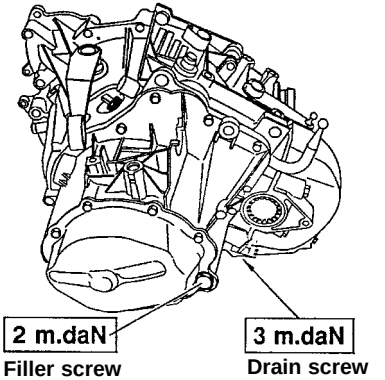

B2CP20HC

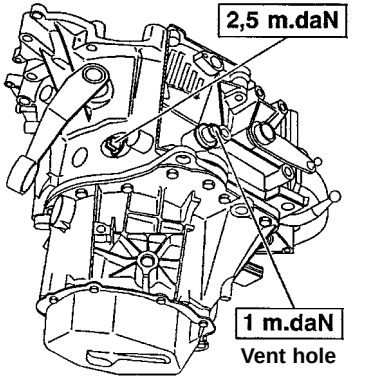

B2CP20JC

Engines : BFZ - LFX – LFY – RFV - RHY

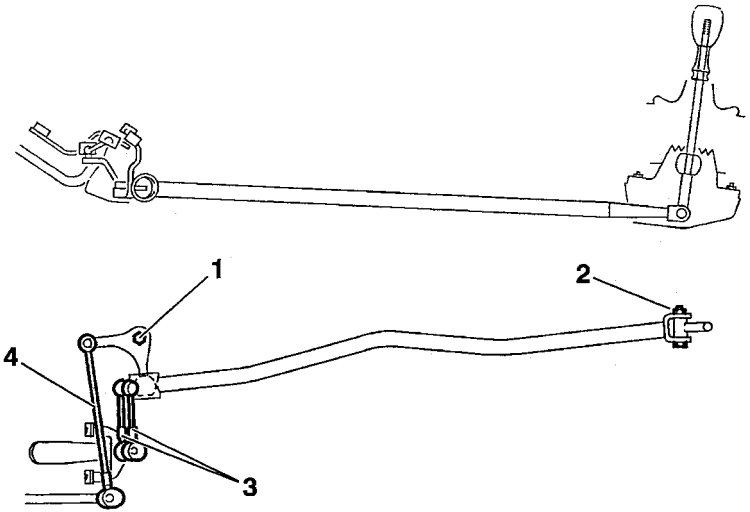

B2BP005D

Tightening torques m.daN.

(1) Pinion/subframe fixing	**2.7 ± 0.2**
(2) Bar /lever fixing	**1 ± 0.1**

Adjustment of the control rods

(3) Length selection rod	**100 ± 1 mm**
(4) Length engagement rod	**245 ± 1 mm**

Note : The adjustment dimensions are the distances between ball-joint centres.

XANTIA- XM	BE3/5 GEARBOX CONTROLS

Engine : RFV

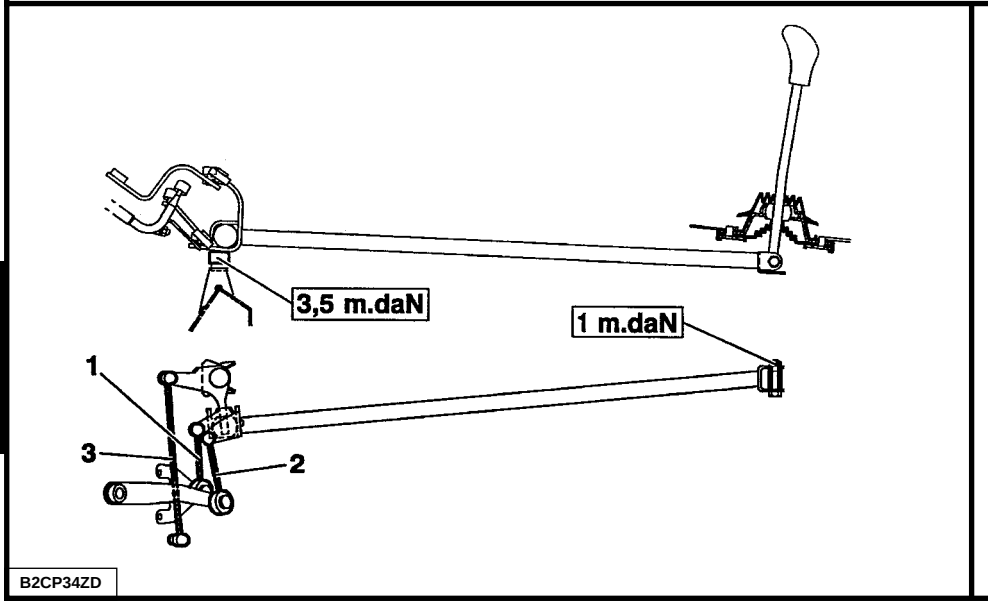

(1)	100 ± 1 mm.
(2)	100 ± 1 mm.
(3)	246 ± 1 mm.

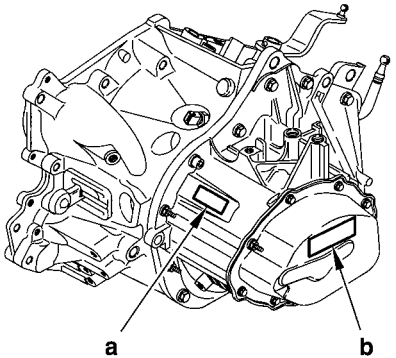

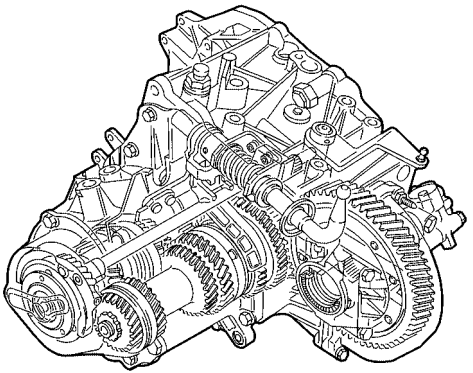

(a) = Marking zone *(Sequence and serial no.).*
(b) = Location of identification label.

B2CP3BNC | B2CP3BPD

SYNERGIE	BE4/5 GEARBOX SPECIFICATIONS

Engines : RFN

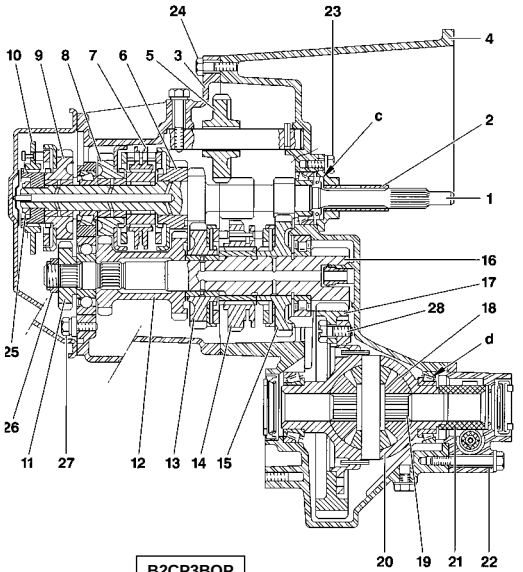

B2CP3BQP

Description (Continued)

(1) Primary shaft.
(2) Clutch bearing guide.
(3) Gearbox casing.
(4) Clutch housing.
(5) Reverse idle.
(6) Drive gear (3rd gear).
(7) 3rd /4th gear synchroniser
(8) Drive gear (4th gear).
(9) Drive gear (5th gear).
(10) 5th gear synchroniser.
(11) Driven gear (5th gear).
(12) Driven gear (2nd / 4th gear)
(13) Driven gear (2nd gear).
(14) 1st / 2nd gear synchroniser
(15) Driven gear (1st gear)
(16) Secondary shaft.
(17) Differential gear.
(18) Satellite gears
(19) Planet gears.
(20) Boîtier de différentiel.
(21) Differential housing.
(22) Extension.

«d» Adjusting shims : **0.7 to 2.4 mm**
(0.10 mm and increasing by 0.10 mm).

"c" Adjusting shims : **1.4 to 1.6 mm**
(0.10 mm and increasing by 0.10 mm).

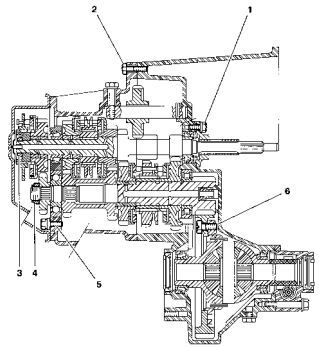

B2CP3BSP

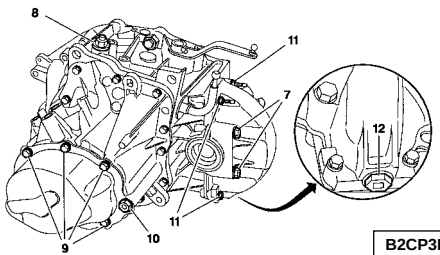

B2CP3BTD

Engine : RFN

Tightening torques

Ref.	Description	Number of screws	m.daN
1	End guide	3	1.2 ± 0.1
2	Clutch housing	13	1.3 ± 0.1
3	Primary shaft nut	1	7.2 ± 0.7
4	Secondary shaft nut	1	6.5 ± 0.7
5	Yoke holding screw	2	1.5 ± 0.1
6	Differential gearwheel screw	2	6.5 ± 0.7
	Reverse gear contact	1	2.5 ± 0.3
7	Differential housing	4	5 ± 0.5
8	Breather pipe	1	1.7 ± 0.2
9	Rear housing cover screw	7	1.2 ± 0.1
10	Top-up plug	1	2.2 ± 0.2
11	Differential housing screw	4	1.2 ± 0.1
12	Drain plug screw	1	3.5 ± 0.4

BE4/5 GEARBOX CONTROLS

Engines : RFN

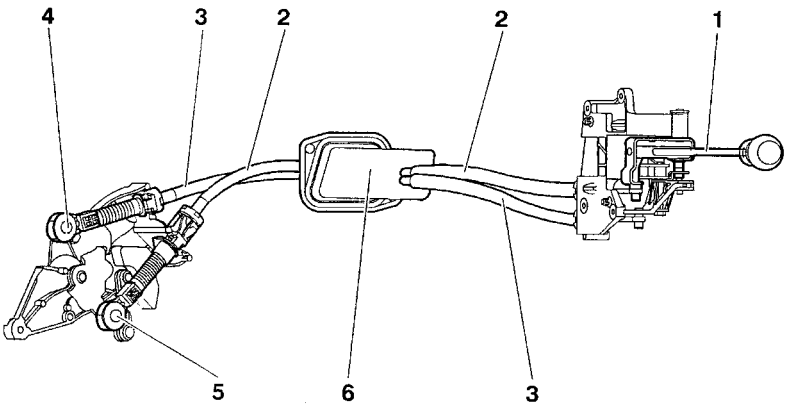

B2CP3BWD

(1) Gear control lever

(2) Gear engagement control cable **(*)**

(3) Gear selection control cable **(*)**

(4) Gear selection ball-joint **Ø 10 mm.**

(5) Gear engagement ball-joint **Ø 10 mm.**

(6) Flexible insulating grommet through the bulkhead

(*) = These two cables cannot be separated.

Engines : RFN

Principles of adjusting the gear controls.

WARNING : Cables should be adjusted each time the gearbox, gear controls or power unit are removed.

Principles.

Lock the gear lever in neutral position, using tool: **9607-T**.

Place the gearbox in neutral.

Couple the cables on the lever.

Fit the ball-joints on the gearbox lever.

Lock the cable lengths with the ball-joint locking keys.

WARNING : Do not use any tool to unclip the ball-joints.

To unlock the ball-joint, press at the centre **«a»**, then pull the ball-joint upwards.

Note : Changing an individual ball-joint is possible as long as the locking key is removed.

Unclip at **«b»**, using two small screwdrivers.

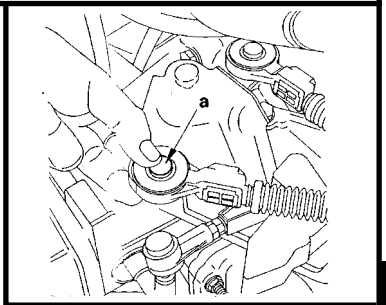

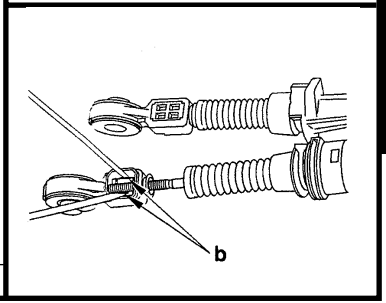

B2CP3BXC | B2CP3BYC

BE4/5 GEARBOX - CHECKS AND ADJUSTMENTS

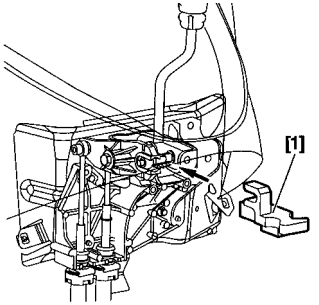

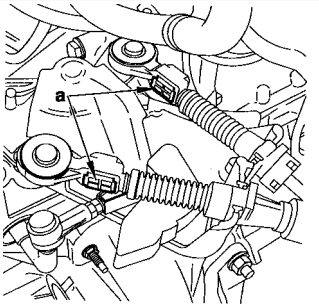

Engines : RFN

Adjusting the gear controls.

TOOL

[1] Tool for positioning the gear lever **: 9607-T.**

ADJUSTMENTS

WARNING : Cables should be adjusted each time the gearbox, gear controls or power unit are removed.

Inside the vehicle
- Remove the trim under the gear lever.
- Lock the gear lever in neutral position,using tool **[1]**.

Under the bonnet
- Remove the air filter assembly.
- Unlock the ball-joint keys at **«a»**.
- Place the gear selection and control levers neutral.
- Lock the cable lengths with the ball-joint locking keys.

CHECKS

- Remove the tool **[1]**.
- Check that all the gears engage without **«tightness »**.
- Check that the gear lever moves identically forwards and backwards and to right and left. If it does not, repeat the adjustment.
- Refit the trim under the gear lever.
- Refit the air filter assembly.

B2CP3C6C | B2CP3C0C

Engines : RGX - P8C

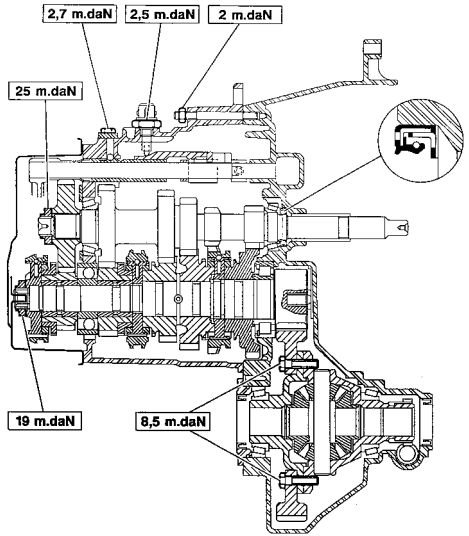

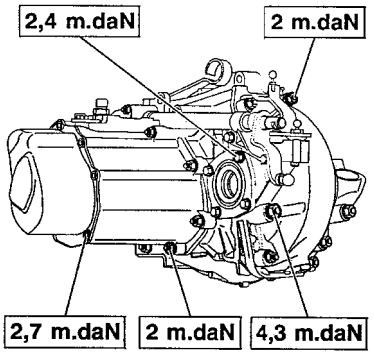

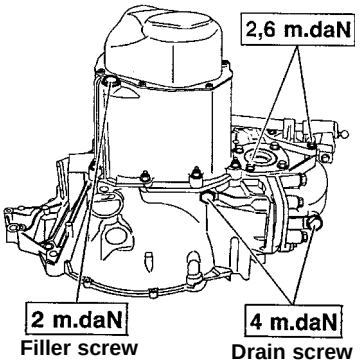

B2CP34KP

B2CP20KC | B2CP20LC

XM	ME/5 GEARBOX CONTROLS

Engines : RGX - P8C

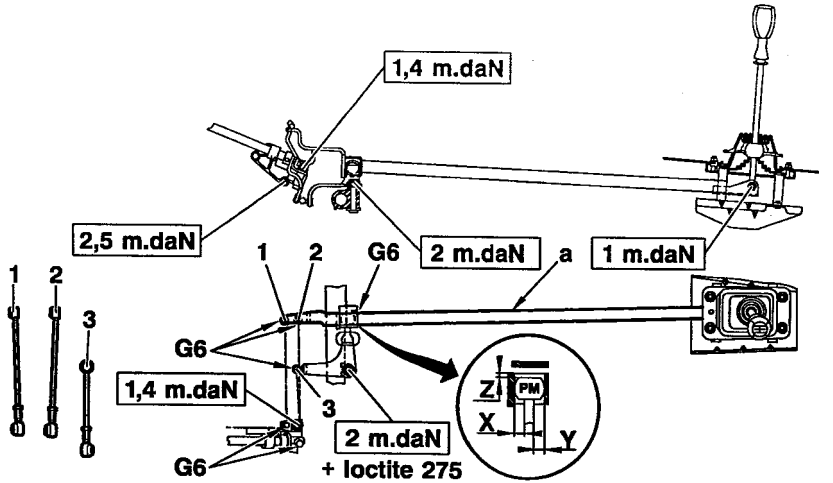

B2CP351D

(1)	Z	3 ± 2 mm
(2)	Z	3 ± 2 mm
(3)	X	8.5 mm
	Y	8.5 mm

Engines : XFZ - RHZ -

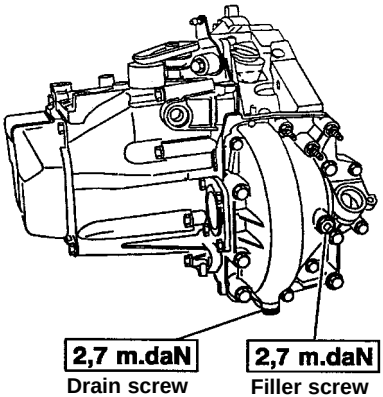

B2CP34LC

Tightening torque : m.daN.

- Gearbox casing/clutch bell housing fixing	**1.8**
- Speedometer cable housing/engine fixing	**1.5**
- Clutch bell housing/engine fixing :	
• Screws H10 x 150 L 75	**6**
• Screws M12 x 175 L 70	**8.5**

ML/5 GEARBOX CONTROLS

Engines : XFZ - RHZ

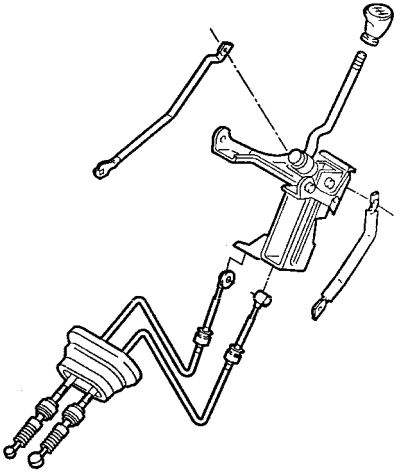

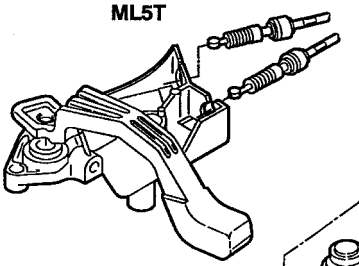

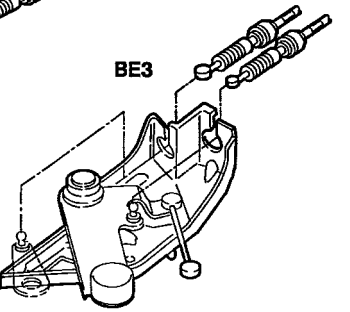

B2CP0350P

Engines : XFZ - RHZ

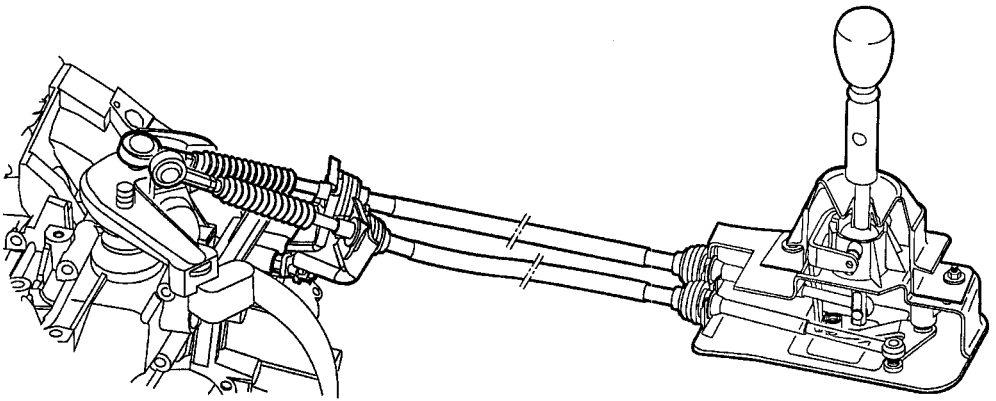

B2CP16FP

MG/5 GEARBOX

Engine : THY

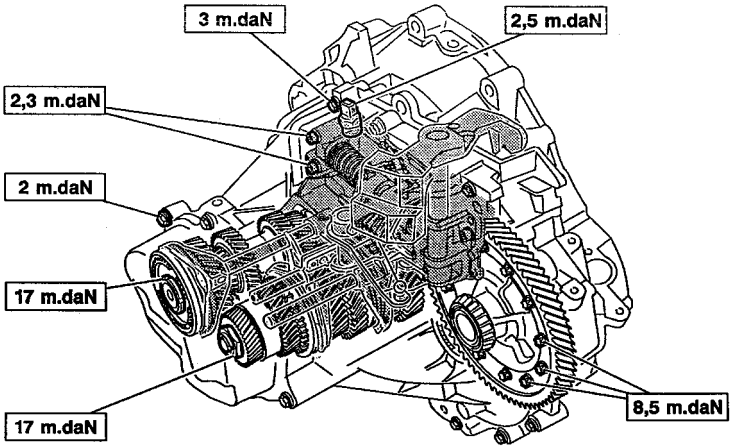

B2CP34MD

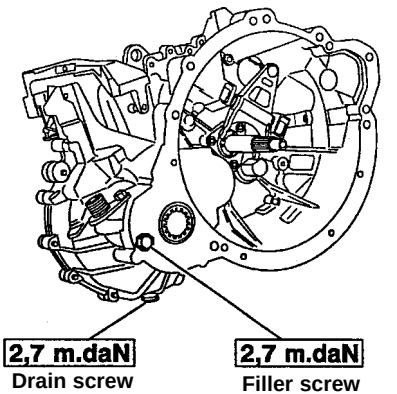

B2CP34NC

Engines : THY

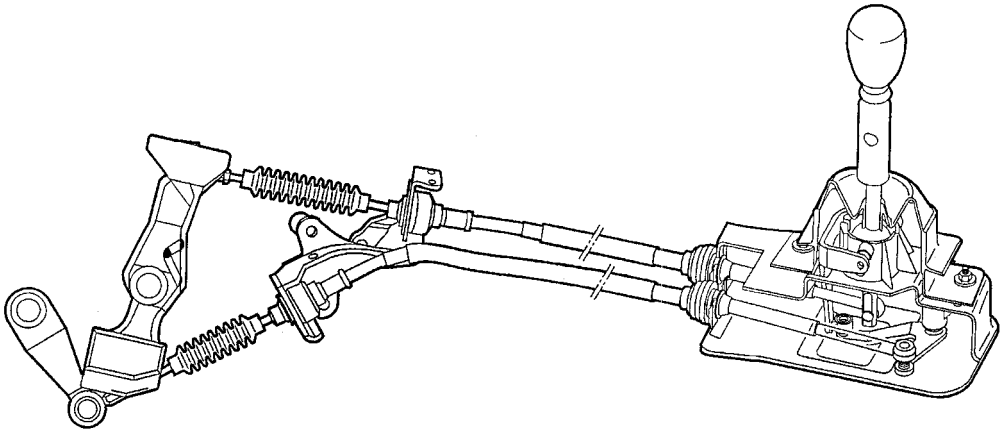

B2CP16GP

4 HP 18 AUTOMATIC GEARBOX

Engines : RFV - RGX - P8C

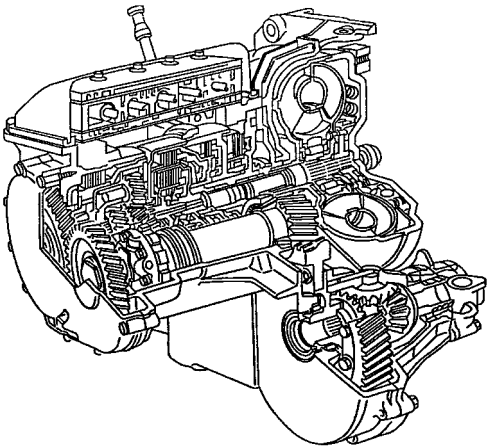

B2CP34UD

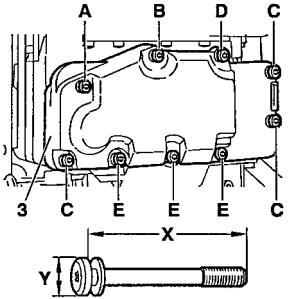

Ref. letter	X (mm)	Y (mm)	Torque m.daN
A	80	12	0.8
B	80	10	0.6
C	75	12	0.8
D	65	10	0.6
E	60	10	0.6

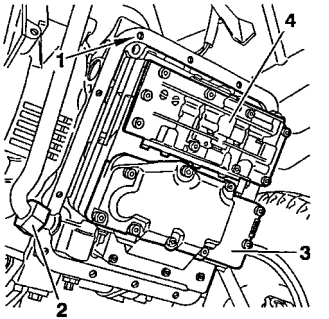

Tightening torques m.daN

(1) Gearbox casing screw	**1 ± 0.1**
(2) Oil dipstick tube nut	**4.5± 0.4**
(3) Strainer cover	
(4) Hydraulic valve block	**0.8**

Note : When replacing an automatic gearbox, it is **ESSENTIAL** to replace the heat exchanger, as well as the oil.

B2CP34SC B2CP34TC

Engines : RFV - RGX - P8C

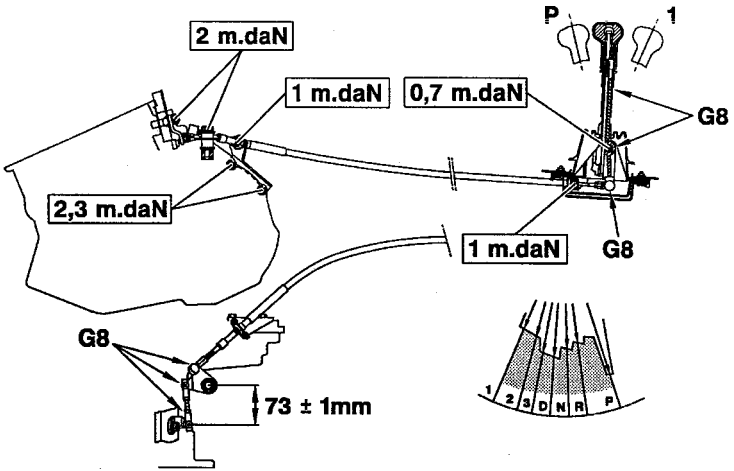

B2CP35AD

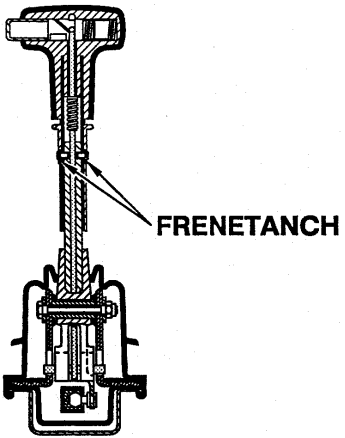

B2CP35BC

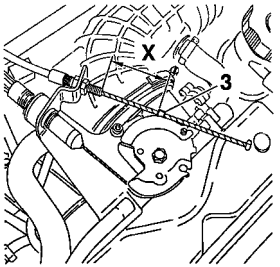

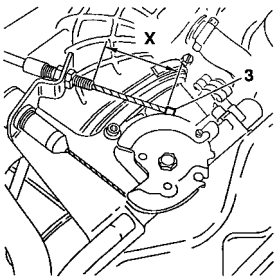

Engines : RFV - RGX - P8C

Checks - Adjustments : Kick down cable

Preliminary conditions :

- Engine hot.
- Idling speed correct.
- Cable routing correct

Accelerator cable adjustment :

- Remove the kick down cable from the drum.
- Pull out the sleeve stop **(1)** and fit the spring clip **(2)** so as to obtain a small clearance at **«a»**.

Kick down cable adjustment :

- Pull out the cable until the start of the kick down command, the lug **(3)** should be at: **X = 39 mm** from the end of the sleeve.
- The lug **(3)** should then be positioned and crimped on the cable.
- Refit the kick down cable on the drum.
- Adjust the clearance **(B)** from **0.5 mm** to **1 mm** max. by tightening the nuts **(4)**.

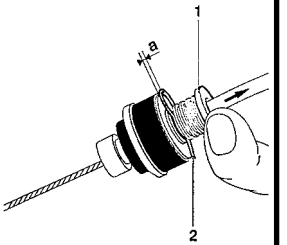

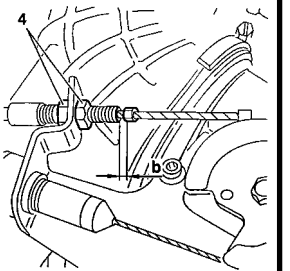

B2CP35CC B2CP35DC B2CP013C B2CP35EC

PRECAUTIONS TO BE TAKEN

Towing
The front of the vehicle must be raised in order to be towed.
If the front of the vehicle cannot be raised :

IMPERATIVE : - Put gear lever in position «N»..
- Do not add any oil.
- Do not exceed 50 kph over a distance of 50 km.

Driving

- Never drive with the ignition switched off.
- Never push the vehicle to try to start it;
  (impossible with an automatic gearbox).

Lubrication

The automatic gearbox is only lubricated when the engine is running.

REMOVING - REFITTING. *(Automatic gearbox).*

WARNING : Never place the gearbox on its lower casing
(risk of deforming the tray and damaging the hydraulic valve block).
Never use the connections as handles for raising, turning, holding or pushing the gearbox.

ESSENTIAL :
- Fit the converter retaining peg while the gearbox is removed.
- Fit the centring peg to locate the gearbox on the engine:
(remove the converter retaining peg just before locating)

WARNING : With the safety programme selected, a snatching can be felt when changing from **"P"** → **"R"** or **"N"** → **"R"**.

PROCEDURE BEFORE REPAIRS

AL 4 gearbox

Oil Quality

If the gearbox has suffered a serious fault resulting in a malfunction or the destruction of a clutch, the oil will overheat and become contaminated with impurities :

the oil is said to be **«burnt»**.

This is characterised by a black colour and the presence of an unpleasant smell.

ESSENTIAL : The gearbox must be replaced.

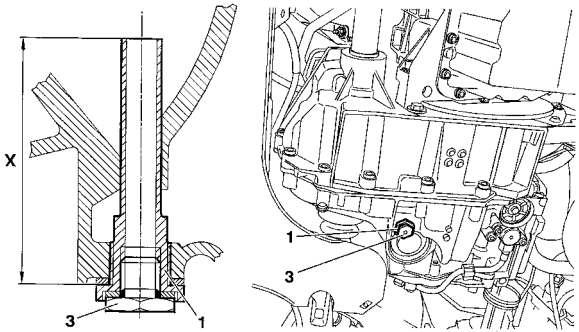

B2CP31FD

Engines : LFY - RFV - RFN - DHX

PROCEDURE BEFORE REPAIRS

Oil level AL 4 *(prior conditions).*
- Vehicle in horizontal position.
- Check gearbox is not in back-up mode.
- Remove the oil filler plug **(2)**.
- Add **0.5 litres** extra oil into the gearbox.
- Foot on the brake, change through all the gears.
- Selection lever in position **"P"**.
- Engine running, at idle.
- Oil temperature : **60°C *(+8°C; -2°C)***, measured with the aid of a diagnostic tool.
- Remove the oil level plug **(3)**.
- Thread of oil then **"drip-drip"** : refit plug **(3)**.Tighten **2.4 m.daN**.
- **"Drip-drip"** or nothing : refit the plug **(3)**.
- Stop the engine.
- Add **0.5 litres** extra oil into the gearbox.
- Repeat the oil level procedure.

NOTE : The level is correct at the moment the thread of oil becomes **drip-drip**.
- Refit the oil filler plug **(3)**. Tighten to **2.4 m.daN**.
- Initialise the oil usage counter (open the diagnostic tool procedure).

Engine : XFZ

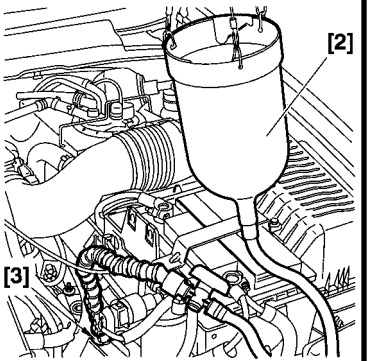

Tools

[1] Hose clamp pliers	**: 4517-T**	**Tool kit 4507-T**
[2] Filling cylinder	**: (-).0341.**	
[3] Specific end-piece	**: (-).0341.B.**	

Checking the oil level.

Preliminary conditions

- Vehicle in horizontal position, handbrake released.
- Engine idling, without using power *(headlamps, heated rear screen etc.)*.
- Check absence of gearbox back-up mode; using a diagnostic tool.
- Apply the brake, change through all the gears.
- Gear selection lever at position **P**.
- The check is to be carried out when the oil has reached a temperature of **55°C ± 1°C**; using a diagnostic tool.
- Remove the oil filler plug **(3)**.

B1BP202C

Engine : XFZ

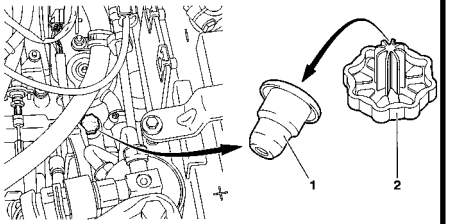

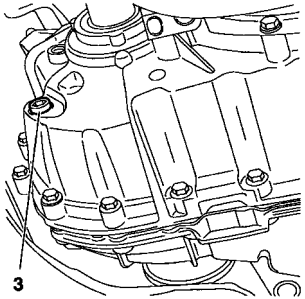

Checking the oil level (continued)

Flowing of oil from the oil filler aperture.
- As soon as the oil temperature reaches **60°C ± 1°C**, refit the oil filler plug **(*)**.

Note : The oil level is correct.

No flowing of oil from the oil filler aperture.

- Refit the oil filler plug **(3)**.
- Stop the engine.
- Remove the air vent assembly **(1)** and **(2)** from the gearbox; using tool **[1]**.
- Add 0.5 litre of additional oil into the gearbox; using tool **[2]**.
- Repeat the procedure of topping up the oil.
- Remove the tools **[2]** and **[3]**.
- Refit the metallic part **(1)** of the air vent assembly, using a **Ø 18 mm** drift and a mallet.
- Clip on the plastic part **(2)** of the air vent assembly.
- Refit the air filter housing.

(*) Note : The method of topping up gearbox oil with an oil gauge remains unchanged.

B2CP3ACD | B2CP3ABC

PROCEDURE BEFORE REPAIRS (continued)

When the ECU detects an erroneous or non-existent value on input or output :

- It writes the fault in memory.
- For each associated context, it writes the context of the oldest fault in memory.
- It initiates a back-up mode strategy.

There are two types of back-up modes :

- The ECU makes replacement values available *(relating to comfort, gear selection quality, loss of functions).*

- Access to emergency programme *(only 3rd ratio and reverse are available).*

Note : 4 HP 20 : A snatching may be felt when changing :
P/R - N/R - N/D.

Reading the fault codes.

- Read the fault codes.

No fault codes present :
Carry out a measure of parameters.

Anomalies present :

- **YES :** Carry out the necessary repairs.
- **NO :** Read the fault codes – engine ECU

- Carry out a road test.

Following an initialisation of the ECU, for a certain period of time there may be an inconsistent gear selection quality *(while ECU parameters are adapted to the gearbox).*
To achieve a consistent standard, it will be necessary to carry out a road test taking in frequent gear changes *(auto-adaptive laws).*

ECU : Downloading, Configuration, Initialisation *(Pedal).*

Downloading *(4 HP 20)*
Updating the gearbox ECU by downloading :
- Follow the procedure using the diagnostic equipment

The operation of downloading is used to update the automatic gearbox ECU or to adapt it to the engine ECU.

After downloading, carry out the following :

Following the diagnostic tool procedure.

- A reinitialisation of the auto adaptor ***(4 HP 20)***.
- A road test ***(4 HP 20)***.

IMPERATIVE : Every update of the automatic gearbox ECU must be accompanied by an update of the engine ECU.

Engines : LFY-RFV-DHX-RFN

ECU : Downloading

Updating the gearbox ECU by downloading :
- SFollow the procedure using the diagnostic tool.

The downloading operation enables the automatic gearbox to be updated, or adapted to an evolution of the engine ECU.
Before commencing the downloading, take the value of the oil usage counter present in the automatic gearbox ECU.

After the downloading operation, carry out the following:

A clearing of faults.
A pedal initialisation.
An initialisation of the auto-adaptives.
A recording of the value of the oil usage counter previously read.
A road test.

ESSENTIAL : Every update of the automatic gearbox ECU should be accompanied by an update of the engine ECU.

Updating the value of the oil usage counter.

Using PROXIA

Access to reading and recording of the oil counter is via the menu :
«Configuration (integrated circuit button) / Oil counter».
Adjustment of the oil counter value is done in incremental steps of **2750 units.**

Using LEXIA or ELIT.

Access to reading and recording of the oil counter is via the menu :
«Oil counter».
Adjustment of the oil counter value is done by entering directly the **5 figures** of the oil counter.

ECU : Downloading, Configuration, Initialisation (pedal) (continued)

Downloading

ECU downloading procedure :
- Follow the diagnostic tooling procedure.

A new ECU or downloaded update is always configured with the following options :
- SHIFT LOCK gear selection lever position.
- OBD outlet (emission standard L4).

If the ECU is to be fitted to a vehicle without one or both of these options:
- Carry out a configuration which inhibits the diagnosis of the option(s) concerned.

Pedal initialisation

A pedal initialisation must be carried out in the following cases :

- Replacement of the automatic gearbox ECU.

- Replacement of the automatic gearbox.

- Downloading of the ECU configuration.

- Adjustment or replacement of the accelerator cable.

- Replacement of the throttle potentiometer.

IMPERATIVE : For a certain period of time, while the ECU parameters are adapted to the gearbox, there may be an inconsistent gear selection quality. To achieve a consistent standard, it will be necessary to carry out a road test taking in frequent gear changes *(auto-adaptive laws).*

Engine : RFN

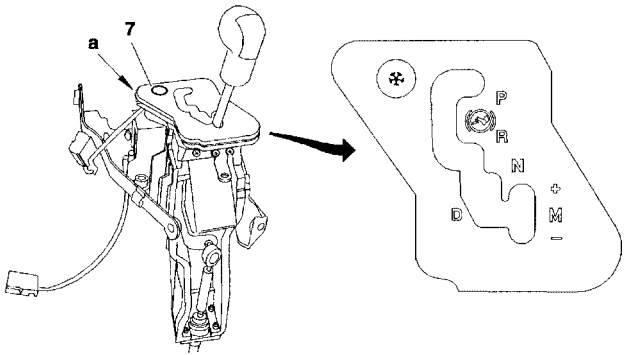

B2CP3CFD

Gear control is by a cable linked to the selection lever located on the dashboard.
The gear selection control has 5 positions :

«P» Park *(immobilisation of the vehicle, whatever the slope).*
«R» Reverse gear.
«N» Neutral.
«D» Drive *(autoadaptative mode, eco-law).*
«M» Manual mode **(M+, M-).**
The vehicle can only be started when the selection lever is in position **«P»** or **«N».**

Shift-Lock

The «shift-lock» is a system which locks the gear selection lever in position **«P»**.
To unlock the gear selection lever from position **«P»**, switch on the ignition and press the brake pedal.
During a repair, the shift-lock can be unlocked by pressing the locking finger **«a»** *(see corresponding operation).*

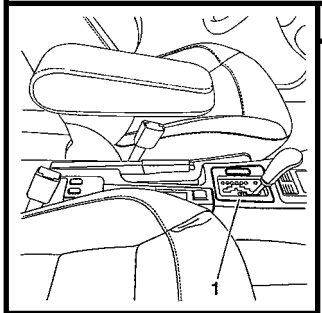

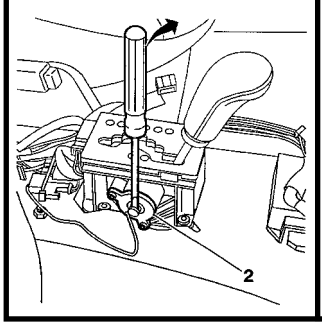

Engine : XFZ

SHIFT LOCK

- The **shift lock** is a system which locks the selection lever in the park position **«P»**.

Unlocking the SHIFT LOCK *(in normal operation)*

- Switch on the ignition.
- Press and hold down the brake pedal.
- Using the selection lever, disengage from position **«P»**.

NOTE : It is IMPERATIVE to disengage the gear selection lever from position "P" the minute you start applying the brake pedal. Otherwise, release pressure on the brake pedal and then try again.

Unlocking the SHIFT LOCK *(In the event of a malfunction)*

- Remove the cover **(1)**.
- Unlock the shift lock **(2)** using a screwdriver.
- Using the selection lever, disengage from position **«P»**.

B2CP268C | B2CP269C

Engine : LFY - RFV - RFN - DHX

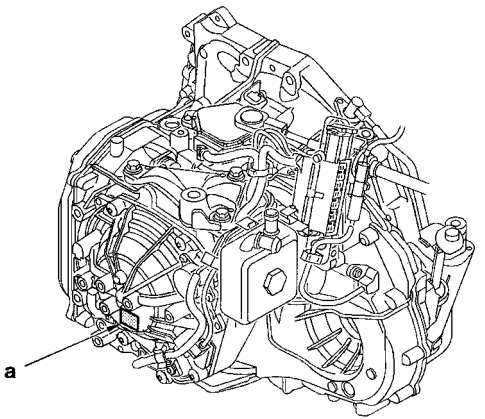

B2CP30ZD

WARNING : CITROEN special semi-synthetic oil cannot be mixed with other oils. The gearbox is lubricated for life.

(a) Component reference.

Engine : XFZ

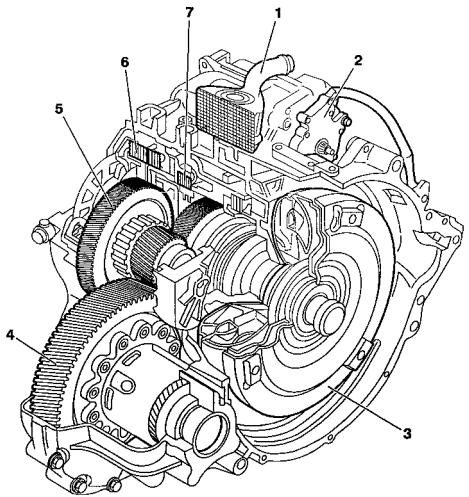

B2CP34VP

(1) Oil/water exchanger.
(2) Selection lever position switch.
(3) Torque converter.
(4) Differential.
(5) Secondary shaft.
(6) Clutch.
(7) Brake.

Engines : XFZ

4 HP 20

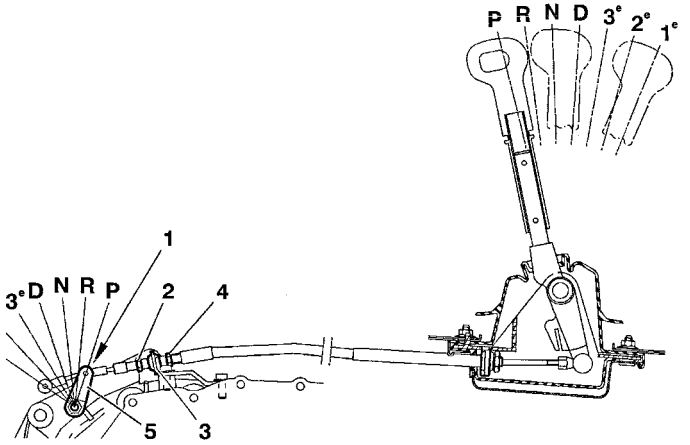

B2CP37FD

Adjusting the selection mechanism.

- Put selection lever **(5)** in position : parking.

- Untighten nut **(2)** and the lock nut **(4)** on either side of the linkage **(3)** so as to connect the ball-joint **(1)** to the selector.

- Apply grease **G9**.

- Tighten the nut **(2)** and the lock nut **(4)** to **1 m.daN**.

Engines : LFY - RFV - DHX - XFZ

4 HP 20

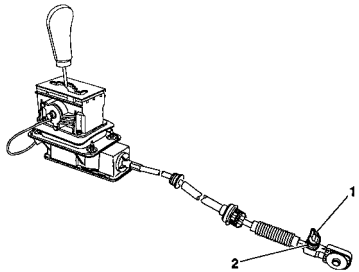

B2CP35FD

Adjusting the selection mechanism

- If the selection mechanism is **NEW**, pull out the locking key **(1)** 1/4 of a turn.

If the selection mechanism is **OLD** and not set correctly, press on component **(2)**, without flexing the cable, then release.

- Check the passage through all the gears.

AL 4

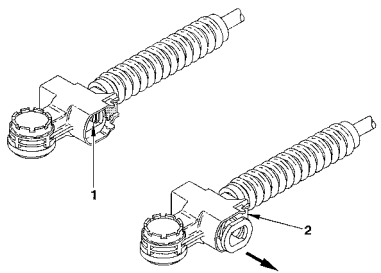

B2CP37ED

Adjusting the selection mechanism.

- If the selection mechanism is NEW or removed from the vehicle, component **(1)** is locked..

When fitting the selection mechanism, press on component **(2)**, without flexing the cable, then release. *(Component **(1)** unlocks).*

- Check the passage through all the gears.

ALL TYPES	TRANSMISSION - GEARBOX					
		Tightening torque (m.daN)		Gearbox oil seal mandrels		
Gearbox	**Engines**	**Driveshaft bearing**	**Driveshaft nut**	**Right**	**Left**	**Tool kit**
BE3/5	BFZ-LFX-LFY-RFV-RHY	**1**	**32.5**	7114-T.W	7114-T.X	7116-T
BE4/5	RFN					
ME/5	RGX-P8C		**34.5**	9017.T.B	9017-TC	9017-T
ML/5	RGX-XFZ-RHZ		**32.5**	9017.T.C	5701-T.A	**NO**
	RFV-RGX DHX-RHZ-P8C (Synergie)		**10 + 60°**			
MG/5	THY	**1.9**	**34.5**	5708-T.J	5708-T.H	5708-T
4 HP 18	RGX - RFV - P8C	**1**				
AL 4	LFY - RFV - DHX		**32.5**	Seal extractor Right/Left (-) 0338 C		(-) 0338
				(-) 0338 J1 + (-) 0338 J2	(-) 0338 H1 + (-) 0338 H2	
4 HP 20	XFZ			8010-T.K2 + 8010-T.J. Rep. : rouge	8010-T.K1 + 8010-T.J. Rep. : noir	8010-T

Tightening torque (m da.N) of the wheel bolts : XANTIA - XM = 9 - SYNERGIE = 10.

AXLE GEOMETRY

General conditions required for adjustment

- Check the tyre pressures.
- Parking brake released.
- Manually set the height to the «NORMAL DRIVING» position.
- Engine running

NOTE : After each body movement, and before each measurement :
- Move the vehicle backwards and forwards slightly by pushing the road wheel by hand.

Front height

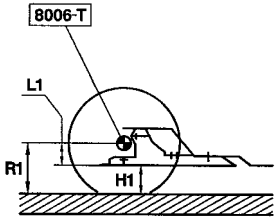

B3BP12XC

H1 = R1 - L1

H1 = Front height
All Types **(+ 7 - 10 mm)**
SC CAR **(± 3.5 mm)**
R1 = Wheel radius in mm.
L1 = Theoretical dimension between the front subframe contact surface and the wheel axis.

Rear height

H2 = R2 - L2

H1 = Rear height
All Types **(+ 7 - 10 mm)**
SC CAR **(± 3.5 mm)**
R2 = Wheel radius in mm.
L2 = Theoretical dimension between the bearing surface of the bodyshell and the wheel axis.

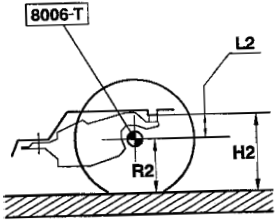

B3BP12YC

Example : front height

- Measure dimension **R1** *(centre of the wheel)* on the vehicle.
- Subtract **L1** from **R1** (See the table on page **214**) and calculate **H1**.
- Measure **H1** on the vehicle.
- The measured dimension H1 should be the same as the calculated dimension **H1 (+ 7 - 10 mm)**.
- Adjust the heights if necessary.

AXLE GEOMETRY (continued)

Measuring the front height

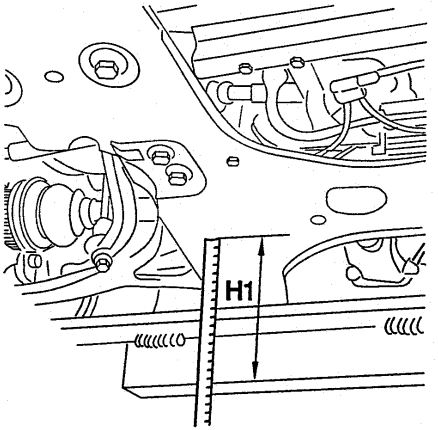

B3BP04EC

Vehicles	L1 (mm)
All types	121

Measuring the rear height

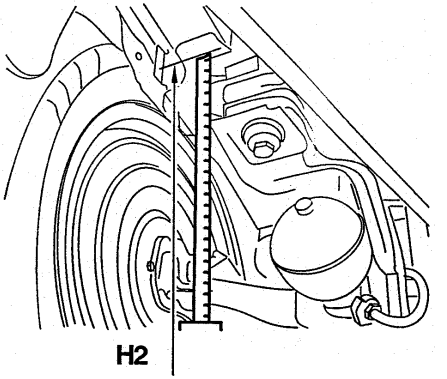

B3BP04GC

Vehicles	L2 (mm)
All types	136

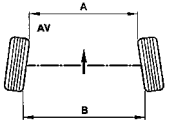

	NOTE	
A < B = Positive figure :	+ =	TOE-IN
A > B = Negative figure :	- =	TOE-OUT

Front axle					Rear axle	
Vehicle	**Tracking**	**Castor**	**Camber**	**King pin inclination**	**Tracking**	**Camber**
		(Non adjustable)			*(Non adjustable)*	
All Types	**0 to - 3 mm** **0° à - 0° 25'**	**3° ± 30'**	**0° ± 30'**	**13° 15' ± 35'**	**+ 1 to + 6 mm** **+ 0°10' to + 0°50'**	**– 1°15' ± 20'**

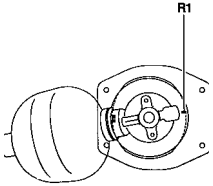

B3CP04LC | B3BP00ZC

WARNING : The castor angle is determined by the direction of fitting of the pneumatic unit support.

Power-assisted steering

R1 towards the rear of the vehicle.

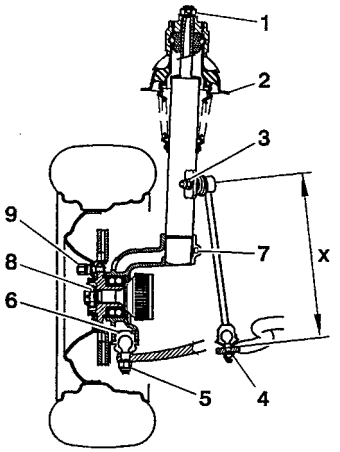

Hauteur de la biellette :
X = 323 ± 1 mm

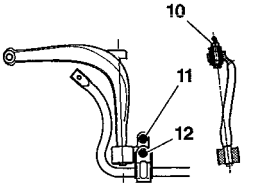

Tightening torques (m.daN)

1 -	Suspension leg upper fixing *(coat with **LOCTITE FRENETANCH**)*	**6.5**
2 -	Suspension leg fixing on bodyshell	**2.5**
3 -	Link rod upper fixing : up to **RPO N° 6615** ball joint stem **Ø 10mm**	**4**
3 -	Link rod upper fixing : from **RPO N° 6616** ball joint stem **Ø 12mm**	**7**
3 -	SC.CAR ram upper fixing	**7**
4 -	Link rod lower fixing : up to **RPO N° 6615** ball joint stem **Ø 10mm**	**4**
4 -	Link rod lower fixing : from **RPO N° 6616** ball joint stem **Ø 12mm**	**7**
4 -	SC.CAR ram lower fixing	**7**
5 -	Ball joint fixing	**4.5**
6 -	Ball joint/swivel fixing	**25**
7 -	Suspension leg fixing on swivel	**5.5**
8 -	Driveshaft fixing on hub	**32**
9 -	Wheel fixing	**9**
10 -	Arm front fixing	**8.5**
11 -	Arm rear fixing	**8.5**
12 -	Arm rear fixing/anti-roll bar rear fixing	**8.5**

B3CP00UD

Evolution : Rear hub nut

Old ➔ 15/12/1999 (A)	New 15/12/1999 ➔ (B)

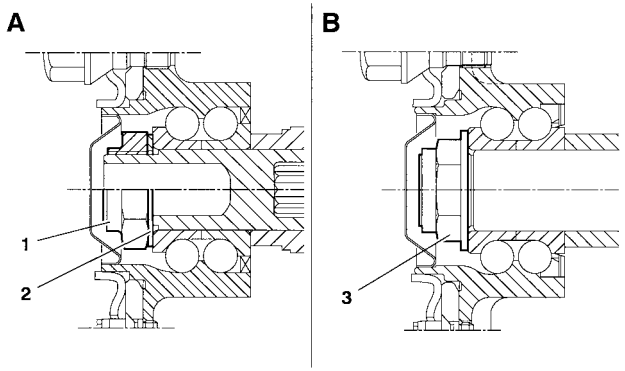

B3DP08AD

Evolution :

- New rear hub nut **(3)**.
- Washer discontinued **(2)**.

Old fitting (A)

(1) Rear hub nut.
(2) Thrust washer.
IESSENTIAL : Tighten to : 27.5 ± 2.7 m.daN

New fitting (B)

(3) Rear hub nut.
ESSENTIAL : Tighten to : 25 ± 2.5 m.daN.

NOTE : It is possible to have both types of fitting on the same axle.

The old nut **(1)** requires the fitting of the thrust washer **(2)**.

WARNING : do not fit a thrust washer **(2)** with a new nut **(3)**.

ESSENTIAL: Respect the tightening torque to be applied when fitting.

WARNING: Identify the type of fitting, before starting a repair.

REAR AXLE

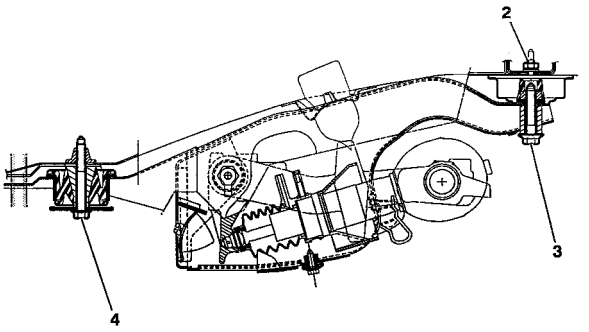

Saloon

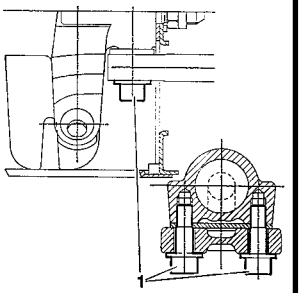

Estate

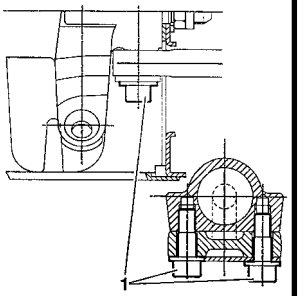

Tightening torques (m.daN)

1 - Anti-roll bar fixing	**9.5**
2 - Rear silentblock/bodyshell fixing	**3.4**
3 - Subframe rear fixing	**11**
4 - Subframe/bodyshell front fixing	**8**

NOTE : (3) and **(4)** Face and threads not lubricated

B3DP06LD | B3DP02DC | B3DP02EC

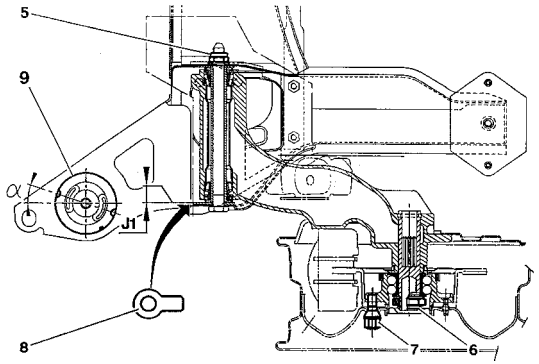

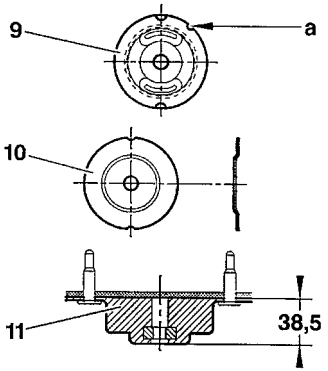

Tightening torques (m.daN)

5 - Arm/shaft fixing	**13**
6 - Hub/stub fixing	**28**
7 - Wheel fixing	**9**

9 - Front runner mountings oriented at 18° (marking: notch at **"a"**).
10 - Washer
11 - Rubber mounting

Adjustment of a suspension arm

ESSENTIAL :

The clearance «J1» should be equal to or less than 0.5 mm.

It must be obtained using a single shim **(8)**.

Thickness of available shims :
0.5 - 1 - 1.5 mm.

Selecting the shim thickness (8)

- **J1** less than or equal to **0.5 mm** (No shim **(8)** required).
- **J1> 0.5 mm ;** less than or equal to **1 mm :** (Fit a **0.5 mm** shim)**.**
- **J1> 1 mm** less than or equal to **1.5 mm** (Fit a **1 mm** shim).
- **J1> 1.5 mm**, fit a **1.5 mm** shim.

B3DP02GD | B3DP02HC

Height control : Saloon and Estate

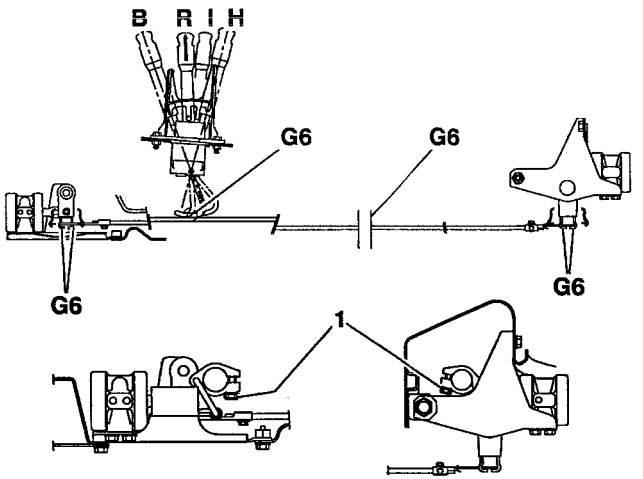

B3BP12ZD

Engines	Ø Anti-roll bars (mm)	
	Saloons	
	Front	Rear
BFZ - LFX - LFY RFV - DHX - RHY	22	21
RGX - RFN - XFZ - P8C - RHZ	22	22
ACTIVA	28	25
Engines	Estate	
All Types	Front	Rear
	23	23

(1) Automatic control clamp
Tighten to **1,5m.daN**
Grease **G6** *(TOTAL MULTIS)*

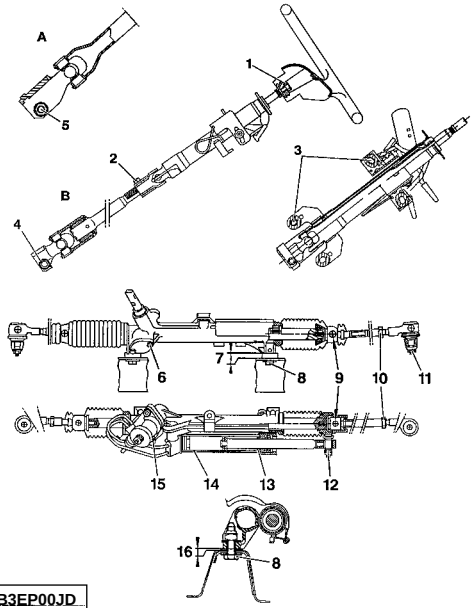

B3EP001D B3EP00JD

	All Types
Steering	Power-assisted
Pinion (no. of teeth)	8
Rack (no. of teeth)	34
Steering rack travel	74.3

Tightening torques (m.daN)

1	Steering wheel fixing	**3**	**11**	Swivel ball joint fixing	**3.5**
2	Cardan joint fixing	**2**	**12**	Steering rack/ram fixing	**6**
4			**14**	Steering/ram fixing	**9**
5			**15**	Valve/casing fixing	**1.2**
3	Steering column fixing	**1.5**	**13**	Travel limiting stop, fitted to the power- steering : **74.3 mm**	
6	Flange/push-rod fixing	**1**			
7	**9 mm** spacer *(mechanical steering)*				
8	Steering/crossmember fixing	**8**	**16**	**3 mm** spacer *(Power- steering)*	
9	Steering rack ball-joint fixing	**6**			
10	Link-rod lock nuts	**4.5**			

General conditions required for adjustment

- Check the tyre pressures.
- Parking brake released.
- Manually set the height to the «NORMAL DRIVING» position.
- Engine running.

Note : After each body movement, and before each measurement : Move the vehicle backwards and forwards slightly by pushing the road wheel by hand.

Front height

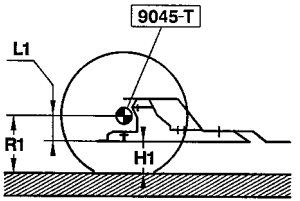

B3BP130C

H1 = R1 – L1

H1 : Front height ***(+7. – 10 mm)***
R1 : Wheel radius in mm.
L1 : Theoretical dimension between the front subframe contact surface and the wheel axis

Rear height

H2 = R2 + L2

H2 : Rear height ***(+7. – 10 mm)***
R2 : Wheel radius in mm.
L2 : heoretical dimension between the bearing surface of the bodyshell and the wheel axis

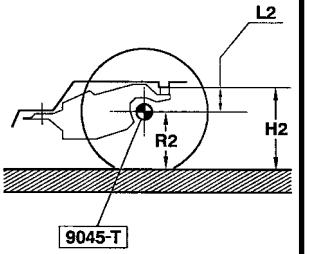

B3BP131C

Example : front height

- Measure dimension **R1** *(centre of the wheel)* on the vehicle.
- Subtract **L1** from **R1** (See the table on page **223**) and calculate **H1**.
- Measure **H1** on the vehicle.
- The measured dimension H1 should be the same as the calculated dimension **H1** ***(+ 7. – 10 mm)***
- Adjust the heights if necessary.

Front height	Rear height
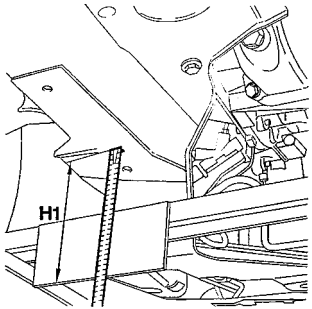	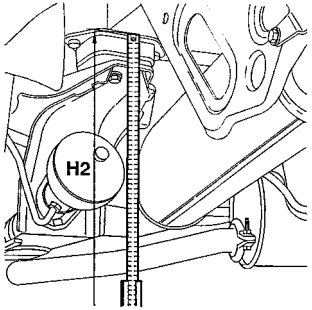

All Types (mm)			
L1	141.5	1.2	H2

B3BP132C B3BP133C

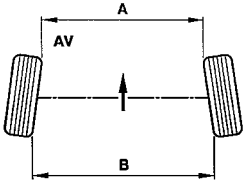

	NOTE	
A < B = Positive figure :	+ =	TOE-IN
A > B = Negative figure :	- =	TOE-OUT

B3BP051D

		Front	Rear
Anti-rearing device		4°	
Tracking (Toe in/out)	0°	0° to - 0°27’	+ 0°5’ to + 1°
	mm	0 to - 3	+ 0.5 to + 6.5
Castor angle *(max. left-right difference 30’)*		2°30’ ± 30’	
Camber angle		0° ± 30’	- 0°50’ ± 20’
King pin inclination		13° 15’	

FRONT AXLE

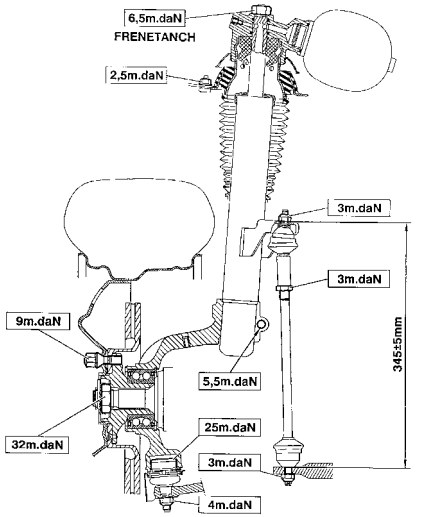

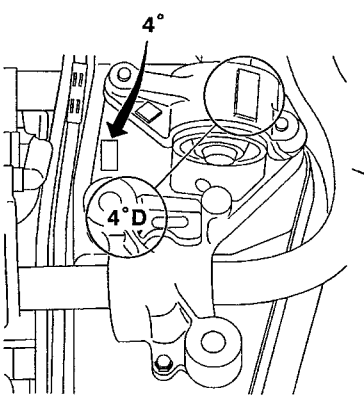

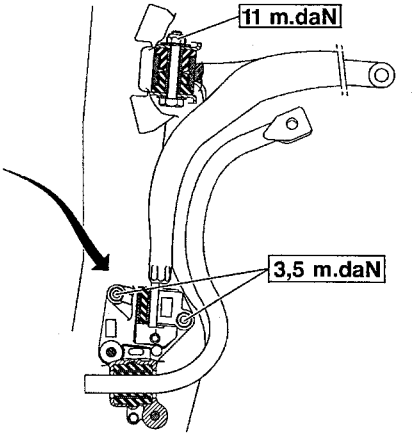

B3CP04NP | B3CP044D

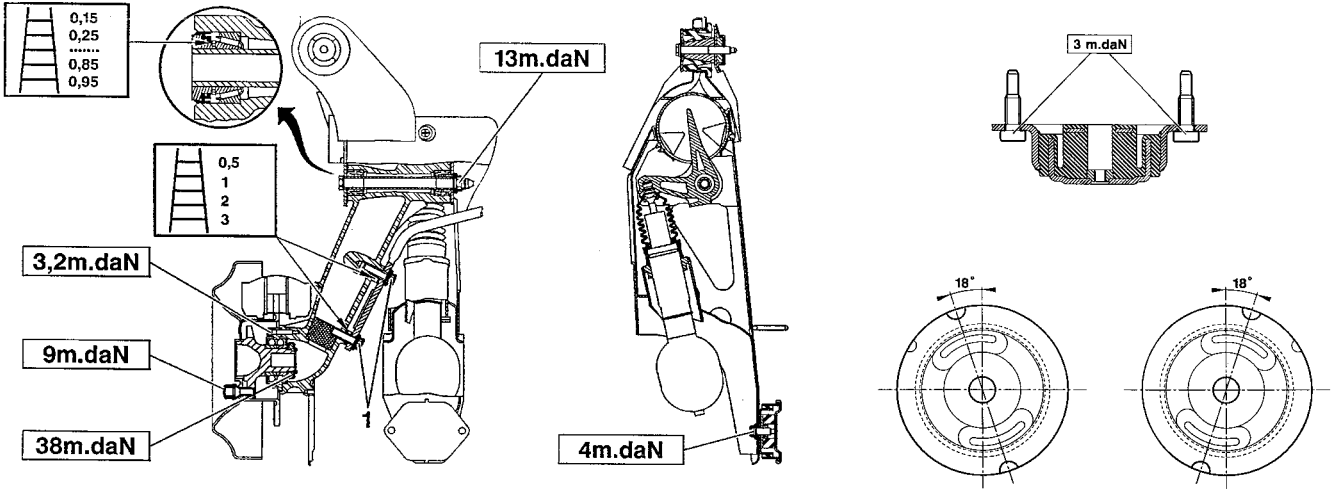

B3DP06MD	B3DP06NC	B3DP06PD

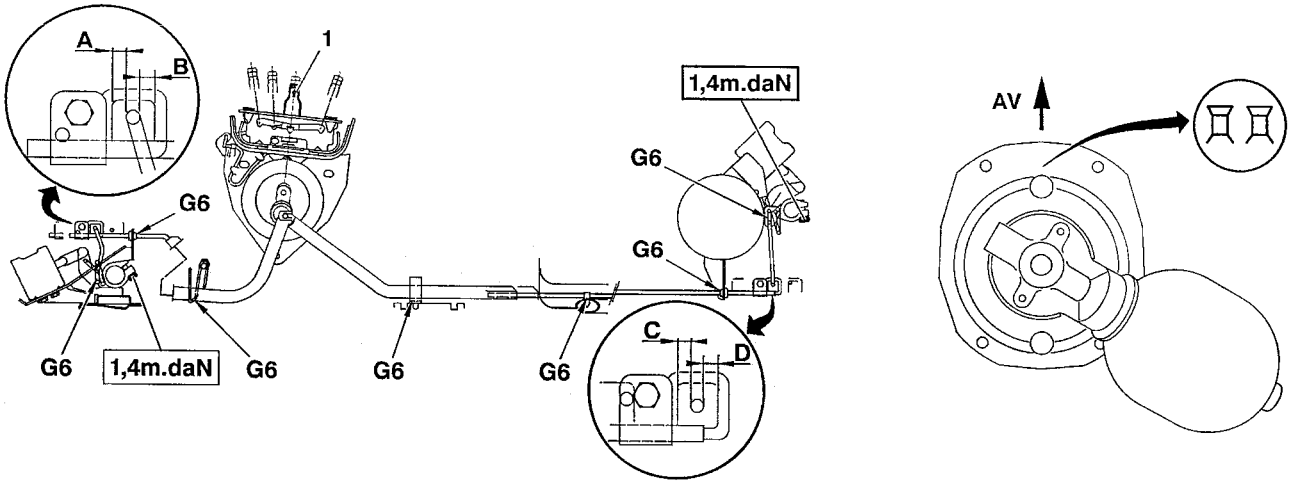

B3BP135D | B3BP134C

Engines	Ø Anti-roll bars (mm)	
	Saloons	
	Front	Rear
RGX	23	22
RFV	23	21
XFZ - P8C - THY	24	22
Ambulance (P8C)	24	22.5
Engines	Estate	
All Types	Front	Rear
	25	22.5

Engines	Front suspension units	
	Saloons and Estate	
	Ø piston rods	Ø pistons
RFV	22	40
RGX	25	
XFZ		
P8C - THY		

Rear suspension cylinders

Saloons : **Ø 37 mm**.
Estate : **Ø 42.5 mm**

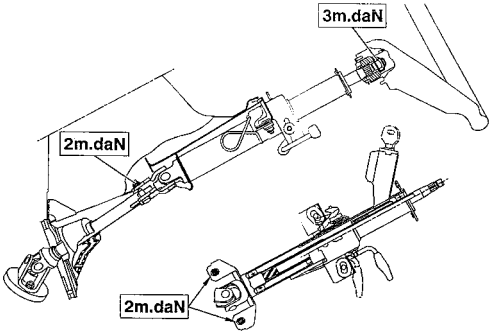

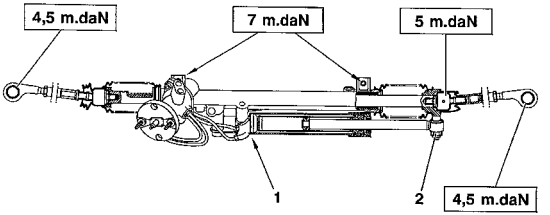

	All Types
Steering	Assistée
Pinion (teeth)	8
Steering rack (teeth)	34
Rack travel	83

(1) 4 and **6 cm³** rams :
- Tighten to **9 m.daN.**

(2) 4 cm³ ram :
- Tighten to **6 m.daN.**

6 cm³ ram
- Tighten to **9 m.daN.**

B3EP09XD | B3EP09YD

Reference height

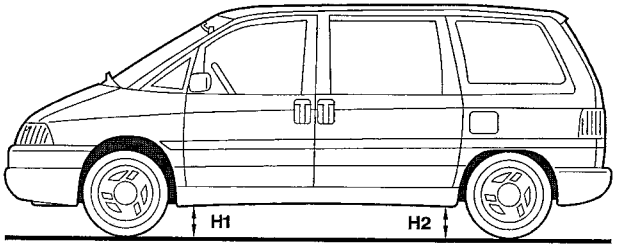

CONDITIONS FOR ADJUSTING THE HEIGHTS
(Tyre pressures correctly set.)

Front	Heights (mm)	Rear
H1	**Tyres**	**H2**
158	195/70R 14	163
161	195/65R 15	166
166	205/65R 15	171

The reference heights must be checked between the jacking points and the ground.

B3BP051D

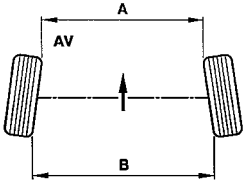

	NOTE	
A < B = Positive figure :	+ =	PINCEMENT
A > B = Negative figure :	- =	TOE-OUT

B3BP051D

		Front	Rear
Tracking *(Toe-in/toe-out)*	0°	+0°8’ to +0°25’	
	mm	+1 to +3	
Castor angle max. *(left-right difference : 30’)*		3°30’ to ± 30’	
Camber angle		0° ± 30’	-1° ± 30’
King pin *(inclination)*		11°28’ ± 40’	

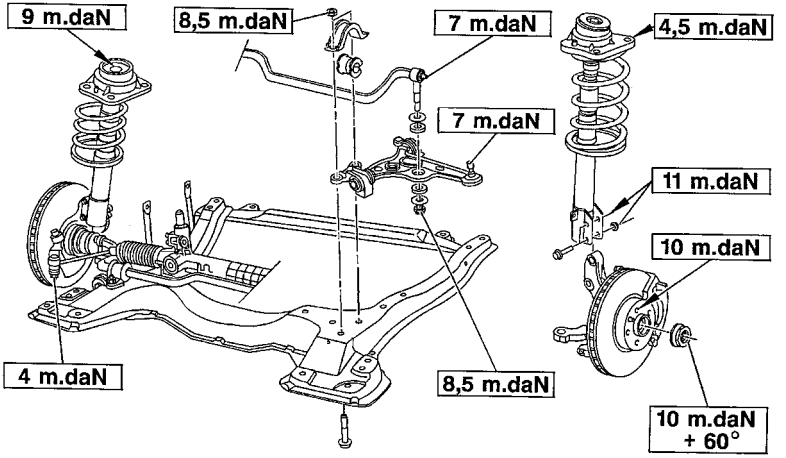

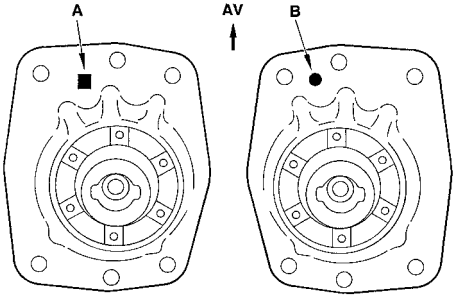

B3CP04PD | B3CP04QD

Evolution : Tightening torque on front subframe

28/05/1999 ➔

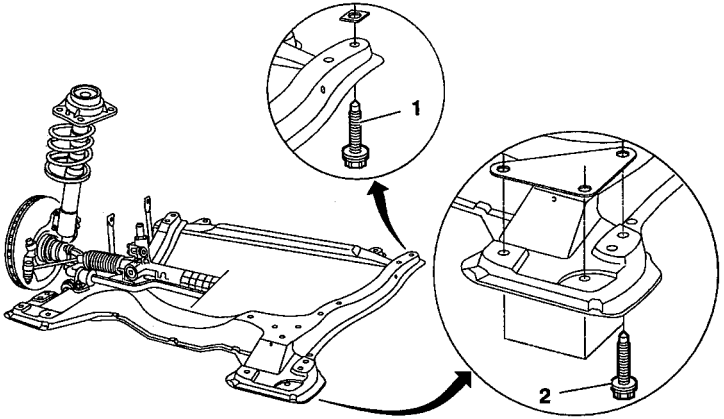

B3CP055D

(1) Fixing screw *(front)*.
(2) Fixing screw *(rear)*.

Tightening torque

Old fitting

Tighten the screw **(1)** to **13.5 m.daN.**
Tighten the screw **(2)** to **13.5 m.daN.**

New fitting.

Tighten the screw **(1)** to **10.7 m.daN.**
Tighten the screw **(2)** to **10.7 m.daN.**

NOTE : Replacement Parts markets the old as well as the new components.

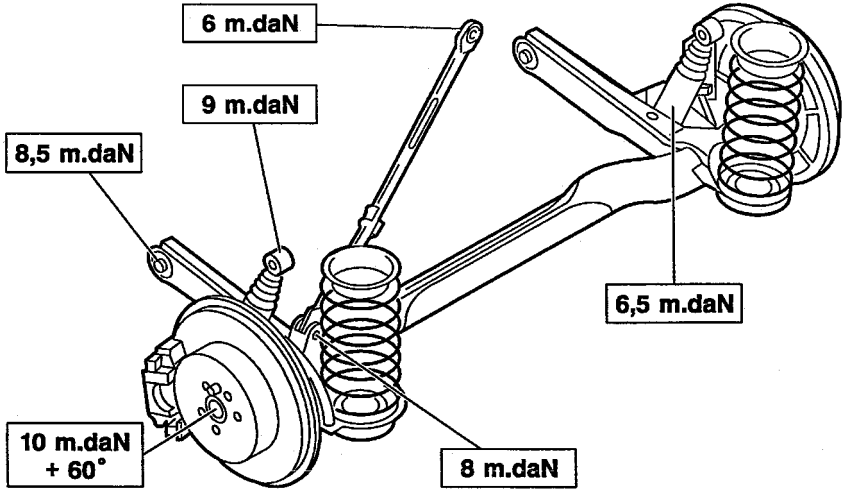

B3DP06QD

SUSPENSION			SYNERGIE
			All Types
Shock absorber (ref.)		Ft	F 23
		Rr	F 254
Anti-roll bar Ø (mm)		Ft	25
		Rr	30
Spring (ref.)	Withoutair-con	Ft	1 grey+ 1 yellow
	With air-con		2 grey+ 1 yellow
		Rr	3 yellow

SYNERGIE	STEERING					
	Steering	Steering rack travel (mm)	Number of teeth		Number of turns of the steering wheel	Steering ratio
			Pinion	Steering rack		
All Types	Assisted	152	9	33	2.98	15.75

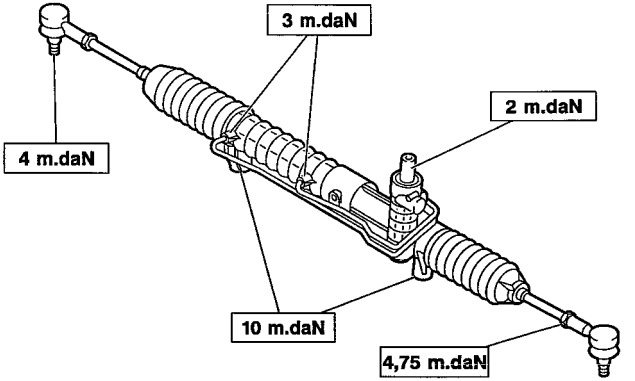

B3EP09ZD

BRAKE SPECIFICATIONS											XANTIA
			2.0i CT	3.0i V6	1.9 TD Auto.	2.0 HDi	1.6i	1.8i	1.8i16V	1.9D	2.0HDi	.0i16V
Ft	Ø mm	Caliper/piston makes	BENDIX SVG-Z0 60				BENDIX 5G 54					
		Disc	288				266					283
	Disc thickness		28				20.4					22
	Minimum disc thickness		26				18.4					20
	Brake pad grade		FERF 949									
Rr	Ø mm	Caliper/piston makes	CITROEN 33									
		Disc	224									
	Disc thickness		9									
	Minimum disc thickness		7									
	Brake pad grade		FERF 949									

(1) With active anti-roll

XANTIA			BRAKE SPECIFICATIONS							
			2.0i CT	3.0i V6	1.9 TD Auto.	2.0 HDi	1.8i	1.8i 16V	2.0i 16V	2.0 HDi
Ft	Ø mm	Caliper/piston makes	BENDIX SVG-Z0 60				BENDIX 5G 54		BENDIX 5G 57	
		Disc	288				266		283	
	Disc thickness		28				20.4		22	
	Minimum disc thickness		26				18.4		20	
	Brake pad grade		FERF 949							
Rr	Ø mm	Caliper/piston makes	CITROEN 33							
		Disc	224							
	Disc thickness		9							
	Minimum disc thickness		7							
	Brake pad grade		FERF 949							

BRAKES — XANTIA

Front

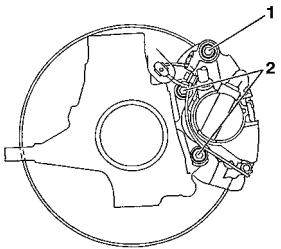

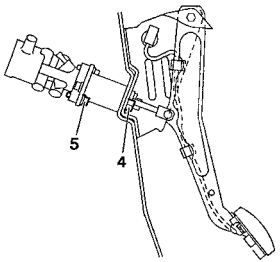

Rear

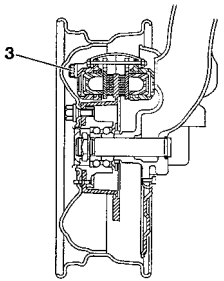

Tightening torques (m.daN)

- Stud **(1)** = **5**
- Caliper fixing **(2)** = **10.5**

B3FP00QC

- Fixing to bodyshell **(4)** = **1.5**
- Control valve fixing **(5)** = **2**

B3FP00TC

- Caliper fixing **(3)** = **4.7**

B3FP00SC

XANTIA	HANDBRAKE

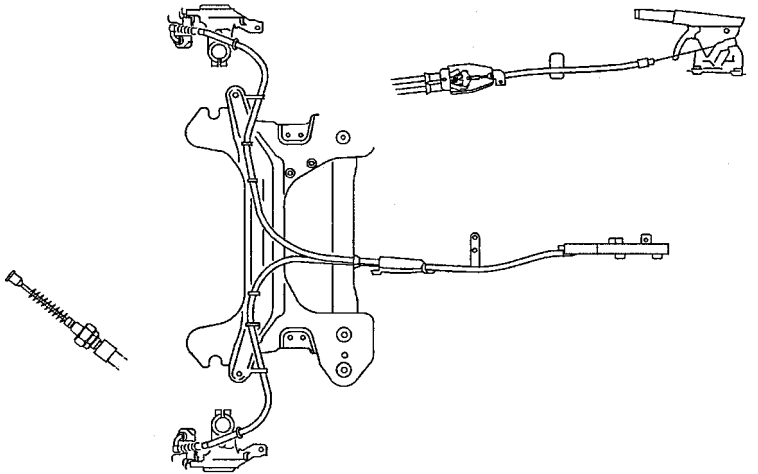

B3FP00WD

- The calipers have a handbrake travel self-adjusting mechanism.

NOTE : The handbrake operates on the front wheels.

Automatic wear adjustment.

Engine running.
Handbrake in the fully released position.
Press the brake pedal **10 times** with an effort of **20 m daN**.
Release the brake pedal.

Adjusting the parking brake sheaths.

NOTE : Before carrying out this operation, ensure that the parking brake sheaths are properly bedded-in.

Operate the handbrake lever **10 times** with an effort of **40 m daN**.
- Set the steering in the straight-ahead position.
- Put the handbrake in the fully released position.
- Carry out the following operations on each side of the vehicle :
- Slacken the lock nut **(1)**.
- Put the lock nut **(1)** against its stop at **«a»**.
- Slacken the nut **(2)**.

Start adjusting with the right side.
Pull the end-piece **(3)** of the parking brake cable by hand.
Slightly tighten, by hand, the nut **(2)** so that it is against the brake caliper (the end-piece **(3)** should be in contact with the lever **(4)**.
Mark one face of the nut **(2)** using a felt-tip marker pen.
RHD vehicles up to **RPO N° 6375** : Slacken the nut **(2)** by **3 turns**.
LHD vehicles all types, RHD vehicles from **RPO N° 6376** : Slacken the nut **(2)** by **1/2 turn**.
Tighten the lock nut to **3 m.daN**.
Dimension **«L»** should be the same on both sides to within **1.5 mm** *(correct balance of the parking brake equaliser).*

NOTE : With the brake lever at rest, the levers **(4)** must not be pulled by the cables, whatever the steering lock angle and the vehicle height.

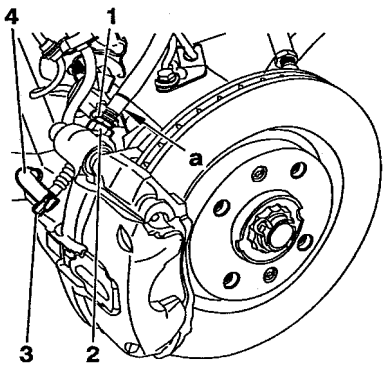

B3FP10RC

B3AQ00DC

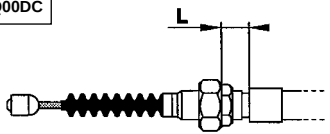

XANTIA	BLEEDING THE BRAKES

- Bleed the brakes with the suspension in the high position, after having operated the suspension as follows..

Position : **LOW → HIGH → LOW → HIGH.**

- Jack up the vehicle with the road wheels hanging free.

- Remove the wheels.

XANTIA fitted with ABS.

- The circuit bleeding operation can be made easier by activating the hydraulic valve block using the **LEXIA** or **PROXIA** diagnostic stations or the **ELIT** test unit.

- Bleed the brakes in the following order : **- Rear right.**
  - Rear left.
  - Front right.
  - Front left.

- Engine running.
- Connect the bleed screw to a receptacle using a transparent pipe.
- Press the brake pedal lightly, or load the pedal with a weight of **5** to **6 kg**.
- Slacken the bleed screw, let the fluid escape until it is free of air bubbles.
- Retighten the screw.
- Top up the LHM reservoir

BRAKE SPECIFICATIONS (continued)								XM
			Petrol				Diesel	
			2.0 i Turbo CT 2.0 i 16 V		3.0 i V6		2.1 TD	2.5 TD
			Saloon	Estate	Saloon	Estate	Saloon	
Ft	Ø mm	Caliper/piston makes	BENDIX Série S5G 57		BENDIX Série 5ZO 60		BENDIX Série S5G 57	BENDIX Série 5ZO 60
		Disc	283		288		283	288
	Disc thickness		26		28		26	28
	Minimum disc thickness		24		26		24	26
	Brake pad grade		ABEX-FERF 949					
Rr	Ø mm	Caliper/piston makes	CITROEN 33		CITROEN 33	CITROEN 40	CITROEN 33	CITROEN 40
		Disc	224		232	251	224	251
	Disc thickness		9		9	12	9	12
	Minimum disc thickness		7		7	10	7	10
	Brake pad grade		ABEX-FERF 949					

adjustment

- Apply the main brake pedal so that the brake pads are in contact with the brake discs, release the pressure.
- Set the handle **(5)** to the locked position.
- Press the pedal **(6)** to the **4th notch** of the quadrant.
- Turn the nuts **(2)** to obtain an equaliser **(3)** balance to within **1.5 mm**.
- Unlock the handle **(5)**, the pedal should return to its rest position.
- The levers **(1)**, should not be pulled by the cables, whatever the steering angle and height of the vehicle.
- Tighten the lock nuts to **2 m.daN**.
- Apply the parking brake several times, ensuring it returns to its rest position.
- The pedal should be between the **6th** and **12th notch** of the quadrant.

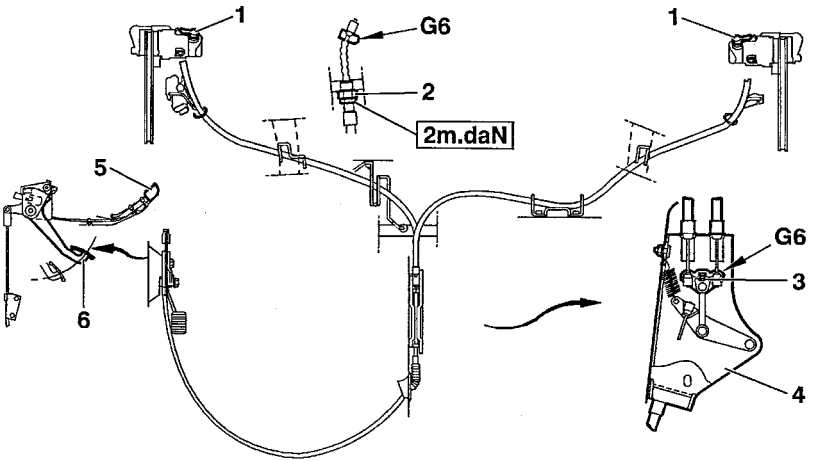

B3FP10SD

BLEEDING THE BRAKES

XM

All Types

- Bleed the brakes with the suspension in the high position, after having operated the suspension as follows.

Position : **LOW → HIGH → LOW → HIGH.**

- Bleed the brakes in the following order : **- Rear right.**
  - Rear left.
  - Front right.
  - Front left.

- Engine running.
- Connect the bleed screw to a receptacle using a transparent pipe.
- Press the brake pedal lightly, or load the pedal with a weight of **5** to **6 kg**.
- Slacken the bleed screw, let the fluid escape until it is free of air bubbles.
- Tighten the screw.
- Top up the LHM reservoir.

XM equipped with ABS.

- The circuit bleeding operation can be made easier by activating the hydraulic valve block using the **LEXIA** or **PROXIA** stations or **ELI**T test unit.

SYNERGIE			BRAKE SPECIFICATIONS	
			2 0 HDi	**2.0i 16V**
Ft	**Ø mm**	**Master cylinder**	23.8	
		Master-vac	279	203 + 230 (Tandem)
		Caliper/piston makes	GIRLING C57 57	
		Disc	281 (Ventilated)	
	Disc thickness		26	
	Minimum disc thickness		24	
	Brake pad grade		GALFER 3314	
Rr	**Ø mm**	**Cylinder or caliper**	20.6	36
		Drum	255	
		Disc		295
	x./ min. thickness			10/8
	Make		BENDIX FN 36	
	Brake lining grade		DON 7124	GALFER 36212
	Compensator cut-off in Bars		**Front** 65 - **Rear** brake 65	**Front** brake 85 - **Rear** brake 85

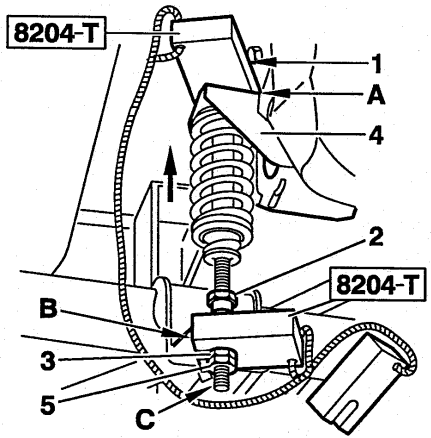

B3FP10TC

Mechanical adjustment of the compensator

- Set the vehicle at reference height (see page **229**).

ESSENTIAL : Never alter the position of the upper nut (1).

- Refit the flanged nut **(2)**.
- Fit the tool **8204-T**.

	Drum	Disc
At shim A	Yellow	Blue
At shim B	Red	

- Adjust the nut **(3)** to allow the free passage, without play, of the red shim **(B)**, without moving the lever **(4)** downwards.
- Tighten the lock nut **(5)** without modifying the adjustment.
- Remove the threaded rod at **C**.
- Tighten the flanged nut **(2)** over the nut **(3)**.

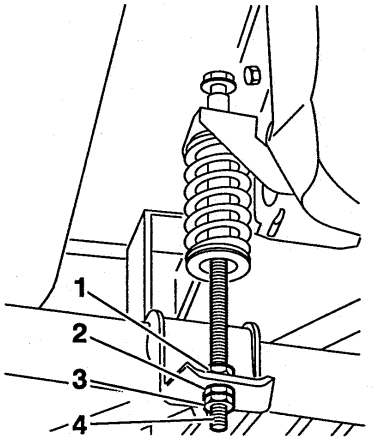

B3FP10UC

Checks and hydraulic adjustment of the compensator

- Use the brake pressure checking equipment **4104-T**, connect diagonally and bleed: **Ø bleed screw :** caliper **8x125** - Wheel cylinder **7x100**.
- Set the vehicle at setting height (See the table on page **229**).

Engines : RFU - DHX P8C		Engine : RGX	
Disc	Drum	Disc	
Front	Rear	Front	Rear
40	40	50	50
65	65	85	85
135	86	135	100

- If the pressures are not correct, adjust as follows :
- Refit the nut **(1)**.
- Adjust using the nut **(2)** to obtain the braking pressure.
- Tighten the lock nut **(3)**.
- Hold the threaded rod **(4)**.
- Tighten the flanged nut **(1)** over the nut **(2)**.

HANDBRAKE

SYNERGIE

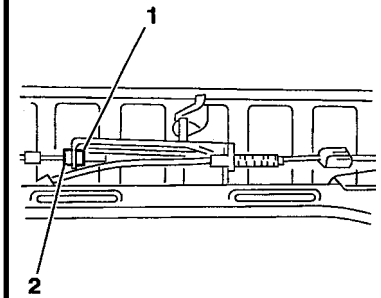

B3FP10VC

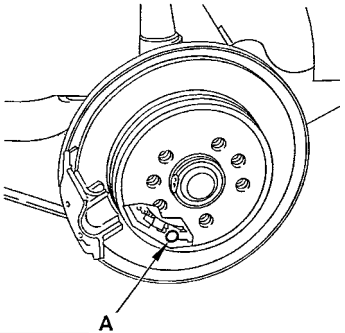

B3FP10WC

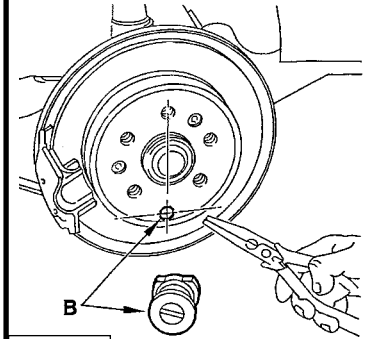

B3FP10XC

- Slacken the cables using the nut **(1)**.
- Remove the blanking plug from hole **A**.
- Position hole **A** opposite the toothed wheel *(adjusting mechanism).*
- Turn the toothed wheel using a flat screwdriver until the disc locks.
- LH side upwards.
- RH side downwards.
- Unlock the disc by turning in the opposite direction by **6 notches**.
- Position the blade **B** of the blanking plug perpendicular to the line passing through the centre of the disc and the centre of the hole. Tighten the nut **(1)** to obtain a handbrake lever travel of **4** to **5 notches**.
- Tighten the lock nut **(2)**.

ALL TYPES	DE-PRESSURISING THE SUSPENSION CIRCUITS	
	Carry out the following operations	**Consequences**
	Vehicle without hydractive suspension (Without SC.MAC valve)	
1	Height control set to «LOW» position.	The suspension spheres are de-pressurised, wait for the vehicle to lower fully.
2	Unscrew the pressure regulator release screw by 1 turn	The main accumulator is de-pressurised.
	Vehicle without hydractive suspension in running order (With SC.MAC valve)	
1	Start the engine.	Open the SC.MAC valves.
2	Height control set to «LOW» position if the vehicle is on stands : raise the wheel(s) concerned.	The suspension spheres + SC.MAC accumulator are de-pressurised.
3	Unscrew the pressure regulator release screw by 1 turn	The main accumulator is de-pressurised
	Vehicle with hydractive suspension in running order (With or without SC.MAC valve)	
1	Start the engine.	The electrovalves of the hydractive regulators are energised. Open the SC.MAC valves.

DE-PRESSURISING THE SUSPENSION CIRCUITS (continued)		ALL TYPES
	Carry out the following operations	**Consequences**
2	Height control set to «LOW» position if the vehicle is on stands : raise the wheel(s) concerned.	The suspension spheres + hydractive regulator accumulators + SC.MAC regulator are de-pressurised.
3	Unscrew the pressure regulator release screw by 1 turn	The main accumulator is de-pressurised.
	Vehicle with hydractive suspension not in running order (With or without SC.MAC valve)	
1	Unscrew the pressure regulator release screw by 1 turn	The main accumulator is de-pressurised.
2	Height control set to «LOW» position.	The SC.MAC accumulator is de-pressurised.
3	Uncouple the pressure regulator outlet pipe. Couple the outlet pipe with the pump **4135-T** + union(s) or **4034-T** + union **(S)** and **(O)** from tool kit **4146-T**.	
4	Switch on the ignition.	The electrovalves of the hydractive regulators are energised.

ALL TYPES	DE-PRESSURISING THE SUSPENSION CIRCUITS (continued)	
	Carry out the following operations	**Consequences**
5	Establish a pressure of **150** to **180 Bars** if the vehicle is on stands : raise the wheel(s) concerned.	The suspension spheres + hydractive regulator accumulators are de-pressurised.
6	Open the bleed screw of the pump **4135-T** or **4034-T**, remove the tools.	The supply circuit is de-pressurised.
	Vehicle with SC.CAR, Citroën Active Roll Control, in running order	
1	Start the engine	The electrovalves of the hydractive regulators are energised, and the SC.MAC valves are opened.
2	Height control set to «LOW» position.	The suspension spheres + hydractive regulator accumulators + SC.MAC regulator are de-pressurised.
3	Stop the engine.	
4	Unscrew the pressure regulator release screw by 1 turn.	The main accumulator is de-pressurised.
5	Open the SC.CAR regulator bleed screw.	The SC.CAR regulator accumulator is de-pressurised.

DE-PRESSURISING THE SUSPENSION CIRCUITS (continued)		ALL TYPES
	Carry out the following operations	**Consequences**
6	Activate **4** to **5** times alternately the two SC.CAR corrector link rods.	The SC.CAR accumulator is de-pressurised.
	Vehicle with SC.CAR, Citroën Active Roll Control, not in running order	
1	Unscrew the pressure regulator release screw by 1 turn.	The main accumulator is de-pressurised.
2	Height control set to «LOW» position.	The SC.MAC accumulator is de-pressurised.
3	Open the SC.CAR regulator bleed screw.	The SC.CAR regulator accumulator is de-pressurised.
4	Activate **4** to **5** times alternately the two SC.CAR corrector link rods.	The SC.CAR accumulator is de-pressurised.
5	Uncouple the SC.CAR accumulator supply pipe, plug the pipe using the unions **4146-T (M)** and **(V)**.	
6	Uncouple the pressure regulator outlet pipe, couple the pipe to the pump **4135-T** + **4146-T.S** or **4034-T** + **4136-T (S)** and **(O)**.	

ALL TYPES	DE-PRESSURISING THE SUSPENSION CIRCUITS (continued)	
	Carry out the following operations	**Consequences**
7	Switch on the ignition.	The electrovalves of the hydractive regulators are energised.
8	Establish a pressure of **150** to **180 Bars** if the vehicle is on stands : raise the wheel(s) concerned.	The suspension spheres + hydractive regulator accumulators are de-pressurised.
9	Open the bleed screw of the pump **4135-T** or **4034-T**, remove the tools.	The supply circuit is de-pressurised.

DE-PRESSURISING THE SUSPENSION CIRCUITS (continued) — ALL TYPES

SPECIFIC CASES
The suspension can be de-pressurised on each axle individually.
ESSENTIAL : The height corrector must be operated in the «LOW» position.

	Carry out the following operations	Consequences
	Vehicle with or without hydractive suspension - Front axle (With SC.MAC valves)	
1	Unscrew the pressure regulator release screw by **1 turn**.	The main accumulator is de-pressurised.
2	Uncouple the pressure inlet pipe **(1)** from the height corrector. Connect the pump **4135-T** or **4034-T - 4146-T.O.**	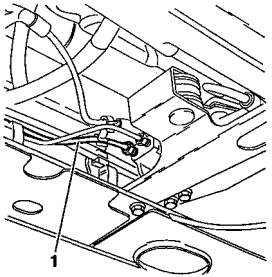 B3BP136C
3	Hydractive Vehicle : Switch on the ignition.	The electrovalves of the hydractive regulators are energised.

ALL TYPES	DE-PRESSURISING THE SUSPENSION CIRCUITS (continued)		
	Carry out the following operations	**Consequences**	
4	Establish a pressure (**100** to **180 Bars**) to control the slide valves of the SC.MAC valve and hydractive regulator.	The suspension spheres + hydractive regulator accumulators + SC.MAC accumulator (front suspension settling) are de-pressurised.	
5	Open the bleed screw of the pump **4135-T** or **4034-T**, remove the tools.	The supply circuit is de-pressurised.	
	Vehicle with or without hydractive suspension - Rear axle (With SC.MAC valves)		
1	Unscrew the pressure regulator release screw by 1 turn.	The main accumulator is de-pressurised.	
2	Uncouple the pipe **(2)** of the SC.MAC valve. Couple the pump **4135-T** or **4034-T.O + 4146-T.O** to the SC/MAC valve.	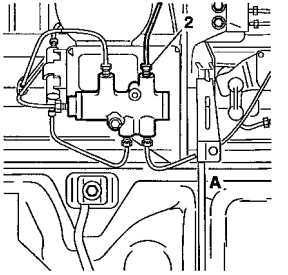 **A =** Without hydractive	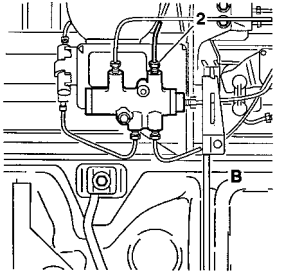 **B =** With hydractive
	B3BP137C B3BP138C		

DE-PRESSURISING THE SUSPENSION CIRCUITS (continued)		ALL TYPES
	Carry out the following operations	**Consequences**
3	Vehicle with hydractive suspension : switch on the ignition	The electrovalves of the hydractive regulators are energised.
4	Establish a pressure (**80** to **180 Bars)** to control the slide valves of the SC.MAC valve and hydractive regulator.	The suspension spheres + hydractive regulator accumulators + SC.MAC accumulator (front suspension settling) are de-pressurised.
5	Open the bleed screw of the pump **4135-T** or **4034-T**, remove the tools.	The supply circuit is de-pressurised.
	Vehicle with hydractive suspension (without SC.MAC valve) Work on the hydractive regulator which controls the axle to be repaired.	
1	Unscrew the pressure regulator release screw by 1 turn.	The main accumulator is de-pressurised.
2	Uncouple the pipe **(3)** of the hydractive regulator. Couple the pump **4135-T** or **4034-T** + **4146-T.O.**	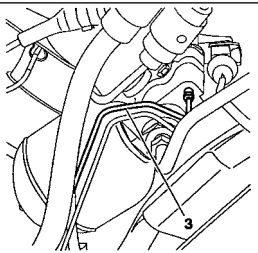 B3BP139C

ALL TYPES	DE-PRESSURISING THE SUSPENSION CIRCUITS (continued)	
	Carry out the following operations	**Consequences**
3	Switch on the ignition.	The electrovalves of the hydractive regulators are energised.
4	Establish a pressure (**80** to **180 Bars**) to control the slide valves of the hydractive regulator.	The suspension spheres + hydractive regulator accumulators (suspension settling) are de-pressurised.
5	Open the bleed screw of the pump **4135-T** or **4034-T**, remove the tools.	The supply circuit is de-pressurised.
	Vehicle with SC.CAR: Citroën Active Roll Control	
1	Unscrew the pressure regulator release screw by 1 turn.	The main accumulator is de-pressurised
2	Height control set to «LOW» position.	The SC.MAC accumulator is de-pressurised.
3	Open the SC.CAR regulator bleed screw.	The SC.CAR regulator accumulator is de-pressurised.
4	Activate **4** to **5** times alternately the two SC.CAR corrector link rods.	The SC.CAR accumulator is de-pressurised

DE-PRESSURISING THE SUSPENSION CIRCUITS (continued)		ALL TYPES
	Carry out the following operations	**Consequences**
5	Uncouple the SC.CAR accumulator supply pipe, plug the pipe with the unions **4146-T.M** and **V**.	
	Front suspension : special case (without SC.MAC valve) (See page 242)	
	Rear suspsion : special case (without SC.MAC valve) (See page 240)	

FILLING AND BLEEDING THE SUSPENSION CIRCUITS (continued)

	Carry out the following operations	Consequences
1	LHM fluid level to the max. mark.	
2	Loosen the pressure regulator release screw.	
3	Start the engine.	
4	Tighten and slacken the pressure regulator release screw several times, then retighten it.	Priming of the high pressure (HP) pump.
5	Height control set to «HIGH» position.	Wait for the vehicle to rise fully.
6	Top up the level : engine running, vehicle in the high position.	LHM fluid topped up.

PNEUMATIC UNITS – DAMPERS

XANTIA

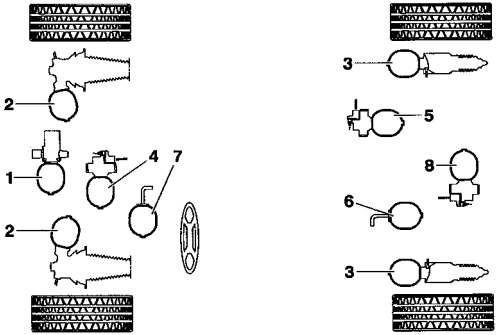

B4BP017D

(1) Main accumulator.
(2) Front suspension sphere
(3) Rear suspension sphere
(4) Front hydractive regulator accumulator
(5) Rear hydractive regulator accumulator.
(6) SC..MAC accumulator
(7) SC.CAR accumulator.
(8) SC.CAR regulator accumulator

Diaphragm types :
- **D** = Desmopan
- **U** = Urepan
- **M** = Multi-layer

WARNING : The pneumatic unit nos. shown in the tables ARE NOT REPLACEMENT PART NOS.

	MAIN ACCUMULATOR (1)				
Vehicle	**Pneumatic unit nos.**		**Volume (cc)**	**Pressure (bars)**	**Damper**
All types accept SC.CAR	96 154 588	D	400	62 (+5 ; – 32)	None
	95 451 376	U			
SC.CAR	95 437 354	D			

(*) SC.CAR : Citroen Active Roll Control - SC.MAC : Citroen Anti-Sink

XANTIA	PNEUMATIC UNITS – DAMPERS				
	NON-HYDRACTIVE SUSPENSION				
Front suspension sphere (2)					
Vehicle type	**Pneumatic unit nos.**		**Volume (cc)**	**Pressure (bars)**	**Damper hole diameter mm**
All Types	96 178 589	D	400	55 (+5 ; – 20)	1.5
	96 194 444	U			
	96 199 318	M	450	50	
Rear suspension sphere (3)					
Vehicle type	**Pneumatic unit nos.**		**Volume (cc)**	**Pressure (bars)**	**Damper hole diameter mm**
Saloon	96 238 977	D	400	30 (+5 ; – 10)	1.2
	96 239 023	U			
Estate	96 239 029	D		40 (+5 ; – 10)	1.25
	96 239 028	U			
SC.MAC accumulator (6)	**NOTE :** This pneumatic unit is located at the rear of the vehicle.				
Vehicle type	**Pneumatic unit nos.**		**Volume (cc)**	**Pressure (bars)**	**Damper**
All Types	96 145 672	D	400	50 (+5 ; – 20)	None
	96 198 613	U			
SC.MAC : Citroen Anti-Sink					

PNEUMATIC UNITS – DAMPERS

XANTIA

HYDRACTIVE SUSPENSION

Front suspension sphere (2)

Vehicle type	Pneumatic unit nos.		Volume (cc)	Pressure (bars)	Damper hole diameter mm
All Types	96 238 949	M	450	45	0.7

Rear suspension sphere (3)

Vehicle type	Pneumatic unit nos.		Volume (cc)	Pressure (bars)	Damper hole diameter mm
Saloon	96 238 951	D	400	30 (+5 ; – 10)	0.6
	96 238 950	U			
Estate	96 239 027	D	500	40 (+5 ; – 10)	0.8
	96 239 026	U	400		

Hydractive regulator accumulator. **NOTE: (*)** The dampers are incorporated in the hydractive regulator.

Vehicle	Hydractive regulator (Axle)	Pneumatic unit nos.		Volume (cc)	Pressure (bars)	* Damper hole diameter (mm)
All types (except V6)	**Front (4)**	96 181 131	M	450	75	1.1
V6		96 281 798			70	1.2
All Types	**Rear (5)**	96 045 530	U	400	50 (+5 ; – 20)	1.3

XANTIA	PNEUMATIC UNITS – DAMPERS

HYDRACTIVE SUSPENSION (Continued)

SC.MAC accumulator (6) **NOTE :** This pneumatic unit is located at the rear of the vehicle.

Vehicle type	Pneumatic unit nos.		Volume (cc)	Pressure (bars)	Amortisseur
All Types	96 145 672	D	400	50 (+5 ; – 20)	None
	96 198 613	U			

SUSPENSION SC.CAR (*)

Suspension sphere. **NOTE : (*) SC.CAR : Citroen Active Roll Control**

Vehicle ACTIVA	Cylinder	Pneumatic unit nos.		Volume (cc)	Pressure (bars)	* Damper hole diameter (mm)
All types (except V6)	Front (2)	96 221 189	M	450	45	0.7
V6 Manual Gearbox		96 289 689			40	
All types (except V6)	Rear (3)	96 222 870	U	400	30 (+5 ; – 10)	0.7
V6 Manual Gearbox		96 289 687				0.6

PNEUMATIC UNITS – DAMPERS

XANTIA

SUSPENSION SC.CAR (*)

Hydractive regulator accumulator. **NOTE: (*)** The dampers are incorporated in the hydractive regulator.

Hydractive regulator	Pneumatic unit nos.	Volume (cc)	Pressure (bars)	Damper hole diameter mm

Vehicle ACTIVA	Hydractive regulator (Axle)	Pneumatic unit nos.		Volume (cm^3)	Pressure (bars)	* Damper hole diameter (mm)
All Types (Except V6)	Front (4)	96 181 131	M	450	75	1.1
V6 Manual gearbox		96 281 798			70	1.2
All Types	Rear (5)	96 221 207	U	400	55 (+5 ; – 10)	1.1

Additional accumulator

Type	Pneumatic unit nos.		Volume (cc)	Pressure (bars)
SC.MAC accumulator **(6)**	96 198 613	D	400	50 (+5 ; – 20)
SC.CAR accumulator **(7)**	96 212 198	U		62 (+5 ; – 32)

SC.CAR accumulator regulator

Regulator	Pneumatic unit nos.		Volume (cc)	Pressure (bars)
SC.CAR **(8)**	96 208 710	U	400	30 (+5 ; – 10)

XM	PNEUMATIC UNITS – DAMPERS

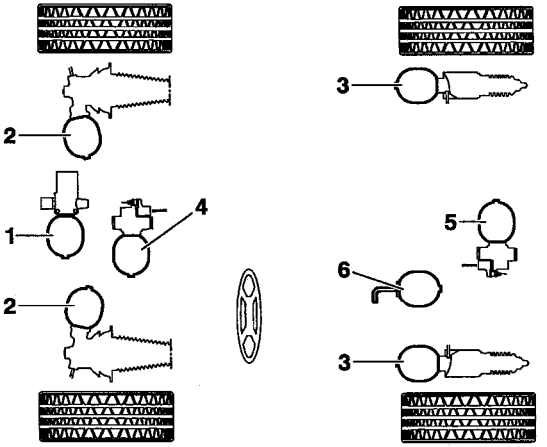

B4BP018D

(1) Main accumulator.

(2) Front suspension sphere

(3) Rear suspension sphere

(4) Front hydractive regulator accumulator

(5) Rear hydractive regulator accumulato

(6) SC.MAC accumulator

NOTA : SC.MAC : Citroen Anti-Sink

Diaphragm types :

- **D** = Desmopan
- **U** = Urepan
- **M** = Multi-layer

WARNING : |The pneumatic unit nos. shown in the tables ARE NOT REPLACEMENT PART NOS.

	MAIN ACCUMULATOR (1)				
Vehicle	**Pneumatic unit nos.**		**Volume (cc)**	**Pressure (bars)**	**Damper**
All Types	95 451 376	U	400	62 (+5 ; – 32)	None

PNEUMATIC UNITS – DAMPERS

XM

NON-HYDRACTIVE SUSPENSION

Front suspension sphere (2)

Vehicle type	Pneumatic unit nos.		Volume (cc)	Pressure (bars)	Damper hole diameter mm
Saloon and Estate (Except 2.1 DT)	96 051 819	D	400	70 (+5 ; – 25)	1.65
	96 222 864	M	450	65	
Estate All Types (Except 2.1TD)	96 069 918	D	400	70 (+5 ; – 25)	1.4
	96 212 110	M	450	65	
Saloon and Estate 2.1 TD	96 222 866	D	400	70 (+5 ; – 25)	1.65
	96 222 865	M	450	65	

Rear suspension sphere (3)

Vehicle type	Pneumatic unit nos.		Volume (cc)	Pressure (bars)	Damper hole diameter mm
Saloon All Types	96 222 874	D	400	40 (+5 ; – 15)	1.25
	96 222 873	U			
Estate All Types	96 120 324	U	500		1.5

SC.MAC accumulator (6) **NOTE :** This pneumatic unit is located at the rear of the vehicle..

Vehicle type	Pneumatic unit nos.		Volume (cc)	Pressure (bars)	Damper
Saloon and Estate	96 198 613	U	400	50 (+5 ; – 20)	None

XM - All Types	PNEUMATIC UNITS – DAMPERS				
	HYDRACTIVE SUSPENSION				
Front suspension sphere (2)					
Vehicle type	**Pneumatic unit nos.**		**Volume (cc)**	**Pressure (bars)**	**Damper hole diameter mm**
Saloon/Estate TT (Except V6)	96 222 867	M	450	50 (+5 ; – 20)	0.8
Saloon/Estate V6	96 290 048			40 (+5 ; –15)	0.7
Rear suspension sphere (3)					
Vehicle type	**Pneumatic unit nos.**		**Volume (cc)**	**Pressure (bars)**	**Damper hole diameter mm**
Saloon All Types Except V6)	96 222 871	D	400	30 (+5 ; – 15)	0.7
	96 222 870	U			
Saloon/Estate V6	96 238 950				0.6
Estate All Types (Except : V6 2.5 TD)	96 222 872	U		40 (+5 ; – 15)	0.7

HYDRACTIVE SUSPENSION (continued)

Hydractive regulator accumulator. **NOTE : The dampers are incorporated in the hydractive regulator.**

Vehicle type	Pneumatic unit nos.		Volume (cc)	Pressure (bars)	Damper hole diameter mm
Saloon/Estate 2.0 i 16 V	96 181 131	M	450	75	1.25
Saloon/Estate **(4)** (Except 2.0 i 16 V)	96 281 798			70	
Saloon **(5)**	96 045 530	U	400	50 (+5 ; – 20)	
Estate **(5)**	96 468 115		500	40 (+5 ; – 15)	

SC.MAC accumulator (6) **NOTE : This pneumatic unit is located at the rear of the vehicle**

Vehicle type	Pneumatic unit nos.		Volume (cc)	Pressure (bars)	Damper
2.0 i - 2.5 TD - 2.1 TD 2.0 i Turbo - CT	96 198 613	U	400	50 (+5 ; – 20)	None

XANTIA	STARTER MOTORS			
Vehicles / models		**Manufacturer and Ref.**	**Class**	**Climate**
XANTIA	1.6i / 1.8i 1.8i 16v	VALEO D6 RA 661	3	H,T
		BOSCH 107019		C
		BOSCH 1108084	4	VC
	1.8i 16v (Auto.) 2.0i 16v	VALEO D6 RA 661	3	H,T
		BOSCH 107019		
		BOSCH 1108084	4	C,VC
	3.0i V6	VALEO D7 R17		H,T,C,VC
	1.9TD 2.0i HDi	VALEO D7 R8	5	H,T
		MELCO M001T80082		
		VALEO D7 R12	6	C,VC

CLIMATE : T (Temperate), **H** (Hot), **C** (Cold), **VC** (Very Cold)

STARTER MOTORS				XM
Vehicles / models		**Manufacturer and Ref.**	**Class**	**Climate**
XM	**2.0i 16v** **2.0i Turbo CT (Auto.)**	VALEO D6 RA 661	3	H,T
		BOSCH 107019		
		BOSCH 1108084	4	C,VC
	2.0i Turbo CT	VALEO D6 RA 661	3	H,T
		BOSCH 107019		C
		BOSCH 1108084	4	VC
	3.0i V6	VALEO D7 R17		H,T,C,VC
	2.1 TD	VALEO D7 R8	5	H,T
		MELCO M001T80082		
		VALEO D7 R12	6	C,VC
	2.5 TD	MELCO M002T84771		H,T,C,VC

CLIMATE : T (Temperate), **H** (Hot), **C** (Cold), **VC** (Very Cold)

SYNERGIE	STARTER MOTORS			
Vehicles / models		**Manufacturer and Ref.**	**Class**	**Climate**
SYNERGIE	**2.0i 16v**	VALEO D6 RA 661	3	H,T
		BOSCH 107019		C
		BOSCH 1108084	4	VC
	2.0 Hdi **2.0 16v Hdi**	VALEO D7 R26	5	H,T
		MELCO M001T80082		
		VALEO D7 R27	6	C,VC

Classes of starter motors

CLASS	CLASS 2	CLASS 3	CLASS 4	CLASS 5	CLASS 6
Torque C	5.5 Nm	6 Nm	10 Nm	11.5 Nm	11.5 Nm
Maximum current for a speed of 1200 rpm	I £ 275 A	I ≤ 300 A	I ≤ 430 A	I ≤ 470 A	I ≤ 500 A

CLIMATE : T (Temperate), **H** (Hot), **C** (Cold), **VC** (Very Cold)

ALTERNATORS							ALL TYPES
		Classes and types					
Engine	Gbox.	Without air con.		Climate	With air con.		Climate
1.6i	M	7	VALEO A11 VI 57	H	9	VALEO A13 VI 191	H
			BOSCH A120310104			MELCO A003TA0591	
		8	MELCO A002TA0291	T,C	8	MELCO A002TA0291	T,C,VC
			VALEO A13 VI 189			VALEO A13 VI 189	
		9	VALEO A13 VI 191	VC			
			MELCO A003TA0591				
1.8i 2.0i 16v	M	7	BOSCH A120411525	H	9	VALEO A13 VI 101+	H,T,C
		8	BOSCH A120411523	T,C		MELCO A002TA2091	VC
			MELCO A002TA1991				
			VALEO A13 VI 102				
		9	VALEO A13 VI 101+	VC			
			MELCO A002TA2091				

CLIMATE : T (Temperate), **H** (Hot), **C** (Cold), **VC** (Very Cold)

ALL TYPES		ALTERNATORS					
		Classes and types					
Engine	Gbox.	Without air con.		Climate	With air con.		Climate
1.8i 16v	M	7	BOSCH A120411525	H	9	VALEO A13 VI 101+	H,T,VC
		8	BOSCH A120411523	T,C		MELCO A002TA2091	
			MELCO A002TA1991		8	BOSCH A120411523	C
			VALEO A13 VI 102			MELCO A002TA1991	
		9	VALEO A13 VI 101+	VC		VALEO A13 VI 102	
			MELCO A002TA2091				
1.8i 16v 2.0i 16v	A	9	VALEO A13 VI 101+	T	12	VALEO A14 VI 14	H
			MELCO A002TA2091	C,VC	9	VALEO A13 VI 101+	T,C,VC
		8	BOSCH A120411523	H		MELCO A002TA2091	
			MELCO A002TA1991				
			VALEO A13 VI 102				

CLIMATE : T (Temperate), **H** (Hot), **C** (Cold), **VC** (Very Cold)

ALTERNATORS							ALL TYPES
		Classes and types					
Engine	Gbox.	Without air con.		Climate	With air con.		Climate
3.0i V6	M				12	VALEO A14 VI 24	H,T,C VC
1.9 TD	M	8	BOSCH A120411513	H,T	9	VALEO A13 VI 94+	H,T
			VALEO A13 VI 95			MELCO A002TA2094	C,VC
			MELCO A002TA1994				
		9	VALEO A13 VI 94+	C,VC			
			MELCO A002TA2094				
	A		VALEO A13 VI 94+	H,T	12	VALEO A13 VI 13	C,VC
			MELCO A002TA2094	C,VC		MELCO A003TA5591	
					9	VALEO A13 VI 94+	T
						MELCO A002TA2094	
					15	VALEO A14 VI 27+	H
						BOSCH A12051611	
						MELCO A004TF0091	

CLIMATE : T (Temperate), **H** (Hot), **C** (Cold), **VC** (Very Cold)

ALL TYPES	ALTERNATORS						
		Classes and types					
Engine	Gbox.	Without air con.		Climate	With air con.		Climate
2.0 HDi	M	15	VALEO A14 VI 27+	H,T,C,VC	15	VALEO A14 VI 27+	H,T,C VC
			BOSCH A12051611			BOSCH A12051611	
			MELCO A004TF0091			MELCO A004TF0091	

CLIMATE : T (Temperate), **H** (Hot), **C** (Cold), **VC** (Very Cold)

ALTERNATORS							ALL TYPES
		Classes and types					
Engine	Gbox.	Without air con.		Climate	With air con.		Climate
2.0i Turbo CT	M	9	VALEO A13 VI 191	H,T	15	VALEO A14 VI 15+	H
			MELCO A003TA0591	C,VC	12	MELCO A004TA0091	T
					9	VALEO A13 VI 191	C,VC
						MELCO A003TA0591	
	A	9	VALEO A13 VI 191	H,T	15	VALEO A14 VI 15+	H,T
			MELCO A003TA0591	C,VC	9	VALEO A13 VI 191	C,VC
						MELCO A003TA0591	
2.0i 16v	M	9	VALEO A13 VI 101+	H,T	12	VALEO A14 VI 14	H,T
			MELCO A002TA2091	C,VC	9	VALEO A13 VI 101+	C,VC
						MELCO A002TA2091	
	A	9	VALEO A13 VI 101+	H,T	15	VALEO A14 VI 15+	H,T
			MELCO A002TA2091	C,VC	9	VALEO A13 VI 101+	C,VC
						MELCO A002TA2091	
3.0i V6	M/A				15	VALEO A14 VI 25+	H,T,C VC

CLIMATE : T (Temperate), **H** (Hot), **C** (Cold), **VC** (Very Cold)

ALL TYPES		ALTERNATORS					
		Classes and types					
Engine	Gbox.	Without air con.		Climate	With air con.		Climate
2.1 TD	M	12	VALEO A14 VI 13	H,T	15	VALEO A14 VI 16+	T
				C,VC	12	VALEO A14 VI 13	C,VC
	A	12	VALEO A14 VI 13	H,T	12	VALEO A14 VI 13	T
				C,VC			C,VC
2.5 TD	M	12	VALEO A14 VI 13	H,T	12	VALEO A14 VI 13	T
				C,VC			C,VC

CLIMATE : T (Temperate), **H** (Hot), **C** (Cold), **VC** (Very Cold)

ALTERNATORS							ALL TYPES
		Classes and types					
Engine	Gbox.	Without air con.		Climate	With air con.		Climate
2.0i 16v	M	8	BOSCH 0123310011	H,T	12	VALEO A14 VI 10	H,T
			MELCO A002TA0291			MELCO A004TA0091	
		9	VALEO A13 VI 81	C,VC	9	VALEO A13 VI 81	C,VC
			MELCO A003TA0591			MELCO A003TA0591	
	A	8	BOSCH 0123310011	|H	15		H
			MELCO A002TA0291				
		9	VALEO A13 VI 81	T,C,VC	12	VALEO A14 VI 10	T,C,VC
			MELCO A003TA0591			MELCO A004TA0091	
2.0 HDi		15	VALEO A14 VI 27+	H,T,C,VC	15	VALEO A14 VI 27+	H,T,C VC
			MELCO A004TF0091			MELCO A004TF0091	
			BOSCH A12051611			BOSCH A12051611	

CLIMATE : T (Temperate), **H** (Hot), **C** (Cold), **VC** (Very Cold)

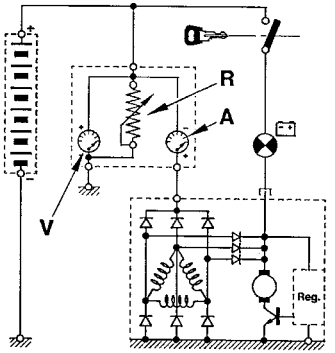

CHECKING THE ALTERNATOR OUTPUT

Connect as shown in the diagram opposite, using an ammeter **(A)**, a voltmeter **(V)** and a rheostat **(R)**, or a Voltmeter/Ammeter/Rheostat combination.
Adjust the engine speed (table opposite) and rheostat charge according to the vehicle's equipment specification in order to obtain U = 13.5 V.

Reminder : The excitation energising current will flow through the warning lamp - check that the warning lamp comes on when the ignition is switched on. It must go out when the engine has started (accelerate slightly).

CHECKING THE VOLTAGE REGULATOR

Set the rheostat to zero and disconnect all the electrical consumers.Display 5000 alternator rpm. If **U** alternator is > 14.7 V, the regulator is faulty.

Note : These tests should be performed with the engine hot and the battery fully charged.

Output under 13.5 VCurrent (A) / Alternator speed

Speed / Class	2000 rpm	3000 rpm	4000 rpm
5	29 A	39 A	43 A
7	42 A	54 A	59 A
8	49 A	62 A	68 A
9	62 A	76 A	83 A
12	72 A	90 A	100 A
15	99 A	128 A	140 A

D1AP01SC

PRE-HEATING AND STARTING SYSTEMS				ALL TYPES
Vehicles / models		**Pre-heater plugs**	**Pre-heater control unit**	**Pre / Post heating (pre-heating duration at 20°C)**
XANTIA	**1.9TD**	BERU 0 100 226 186	BOSCH 0 281 003 005	6s / 180s
		BOSCH 0 250 201 039	VALEO 73507212	
	2.0 HDi	CHAMPION CH170	NAGARES 735068	Controlled by diesel injection ECU
		BOSCH 0250202032	CARTIER 960411-P	
XM	**2.1TD**	BERU 0 100 226 186	VALEO 73506802	
		BOSCH 0 250 201 039		
	2.5TD	BERU 0 100 226 186	VALEO 73506802	
		BOSCH 0 250 201 039		
SYNERGIE	**2.0 Hdi**	CHAMPION CH170	NAGARES 735068	
	2.0 16v HDi	BOSCH 0250202032	CARTIER 960411-P	

Preheater plug resistance : 0.4 Ω ≤ R ≤ 0.6 W

ALL TYPES	AIR CONDITIONING R 134 a (HFC)					
				Compressor		
Vehicle	Engine	Date	Refrigerant refill (± 25 gr)	Capacity Variable	Oil quantity cc	Oil reference
XANTIA	XU All types	10/94 >	875 gr	SD 7 V 16	135	SP 10
	3.0 i V6	01/97 >	825 gr			
	XUD All types DW 10 All types (Except 2.1 TD)	02/96 >		DELPHI V5 (1)	265 ± 15	PLANETELF 488
	2.1 TD	05/97 >	850 gr			
XM	XU All types	10/93 >	725 gr	SD 7 V 16	135	SP 10
	3.0 I V6	05/97 >	825 gr			
	XUD All types (Except 2.5 TD)	10/93 >	725 gr			
	2.5 TD	07/94 >	825 gr			
SYNERGIE	All types	06/94 >	1000 ± 50 gr			

(1) HARRISON Division

SPECIAL FEATURES : AIR CONDITIONING SYSTEM (R 134.a) — ALL TYPES

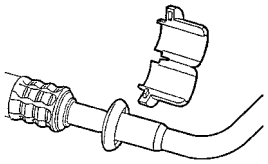

C5HP073C

Vehicle		Click-fit union removal/fitting tool		
		Ø Inch	Ring colour	Tool kit 4164-T
XANTIA SYNERGIE	All types	5/8	Black	8005-T.A.
XM	3.0 i V6			
XM	All types (except V6)	1/2	Blue	8005-T.B.

	Tightening torques (m.daN).	
	Unions	
Ø Pipes	Steel/Steel	Aluminium/Steel
M 06	1.7 ± 0.3	1.3 ± 0.3
M 08	3.8 ± 0.3	2 ± 0.2
M 10	4 ± 0.3	2.5 ± 0.3

REMINDER : Refilling the air conditioning system should be done through the **LOW PRESSURE** valve whenever possible.
NOTE : The diameters of the High Pressure and Low Pressure valves are different, to avoid mixing them up.

NOTE : For operations concerning draining, drying (empty), checking and recharging of a system: (refer to **BRE 0290)**
WARNING : For R 134.a quantities: (See table on page**: 280)**

ALL TYPES	SPECIAL FEATURES : AIR CONDITIONING SYSTEM (R 134.a)

Compressor lubricant.

ESSENTIAL: The compressor lubricant is extremely hygroscopic; always use FRESH oil.

Checking the compressor oil level.

There are three specific cases :
1) Repairs to a system without leaks.
2) Slow leak.
3) Fast leak.

1) Repairing a system without leaks.

a) Using draining/recovery equipment not fitted with an oil decanter.
- Drain the system as slowly as possible via the **LOW PRESSURE** valve, so as not to lose any oil.
- No more oil should be added when filling the system with **R 134.a** fluid.

b) Using draining/filling equipment fitted with an oil decanter.
- Drain the **R 134.a** fluid from the system in accordance with the instructions in the equipment handbook.
- Measure the amount of oil recovered.
- Add the same amount of **NEW** oil when filling the system with **R 134.a** fluid.

c) Replacing a compressor.
- Remove the old compressor, drain it and measure the oil quantity.
- Drain the new compressor (supplied full), so that the same amount of **NEW** oil is left in the compressor as was in the old compressor.
- No more oil should be added when filling the system with **R 134.a** fluid.

Checking the compressor oil level (continued)

2) Slow leak.

- Slow leaks do not lead to oil loss, therefore the same procedure should be followed as if there was no leak at all.

3) Fast leak.

- This type of leak causes both oil loss as well as allowing air to enter the system.It is therefore necessary to :

- Replace the dehydrator.
- Drain as much oil as possible (when replacing the faulty component).

Either before or during filling of the system with **R 134.a** fluid, introduce **80 cc** of **NEW** oil into the system

ALL TYPES	SPECIAL FEATURES : AIR CONDITIONING SYSTEM (R 134.a)			
	Presence of pollen filter			
Vehicle	**Equipment**	**RPO No.**	**Presence of filter**	**Observations**
AX-SAXO-ZX-BX-C15	All Types		**NO**	
XSARA **XSARA PICASSO**	Without aircon		**YES** (Behr)	Exc. driving school
	Base aircon		**YES** (Larger)	
	Regulated aircon		**YES** (Valeo)	
XANTIA I and II	Without aircon		**NO**	
	Regulated aircon		**YES**	Except Brazil
XM I and II	All Types		**NO**	
SYNERGIE	Without aircon		**NO**	
	Base aircon		**NO**	
	Automatic aircon	➔ 8148	**Do not fit**	Ingress of water
		8148 ➔ 8421	**YES** (Behr)	Body modification
		8421 ➔	**YES** if Exclusive	2 blowers
			NO if X and SX	1 blower
BERLINGO	Without aircon		**NO** (Valeo)	
	Base aircon		**YES** (Valeo)	
DISPATCH	All Types		**NO**	
	Base aircon		**NO**	
RELAY	Without aircon		**NO**	
	Base or double aircon		**YES**	

Removing/refitting the pollen filter

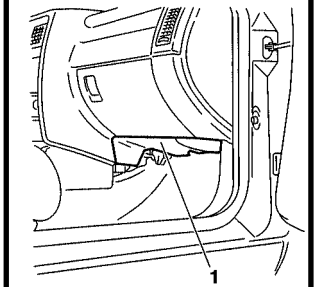

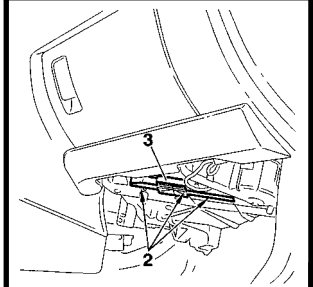

Remove.

- Access from below the dashboard on passenger's side, remove the sound-deadening **(1)**.

- Remove the three screws **(2)** and the cover **(3)**.

Remove the filter **(4)**.

Refit.

- Proceed in the opposite order to removal.

C5HP00UC | C5HP00VC

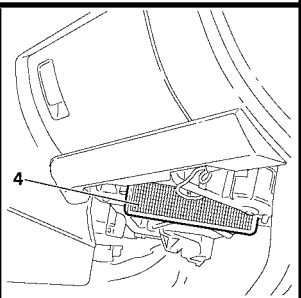

C5HP00WC

XANTIA	POINTS PARTICULIERS : CIRCUIT DE REFRIGERATION (R 134.a)

Evaporator.

OLD → 01/97	NEW 01/97 →
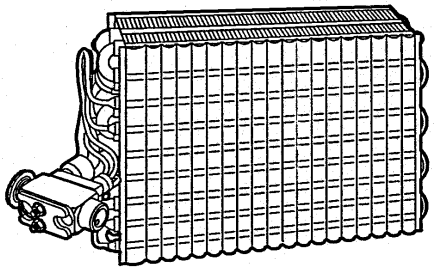 C5HP063C	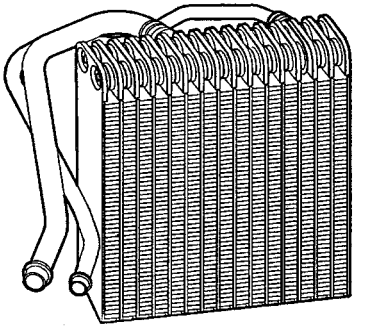 C5HP062C

The evaporator makes use of new technology and is called a **"plate evaporator"**.

The coils around which the **R 134.a** fluid flowed previously, are replaced by plates which offer a greater area of contact with the air, thus increasing evaporator efficiency.

CHECKING THE EFFICIENCY OF THE AIR CONDITIONING SYSTEM

ALL TYPES

CHECKING TEMPERATURES.

TOOLS

Two thermometers.

Preliminary conditions.

Position of the air conditioning controls :
- Maximum cold air.
- Air blower in maximum position.
- Air distributor in "ventilation" position, with the dashboard vents open.
- Air intake flap in "exterior air" position.

Conditions and vehicle equipment.

- Bonnet closed.
- Doors and windows shut.
- Ensure the vehicle is in a sheltered area *(away from wind, sun, etc..).*

CHECKS.

If all these conditions are met, take the following action :

- Start the engine, with the air conditioning off, and wait for the cooling fan first speed to cut in.
- Operate the air conditioning and set the engine speed to **2500 rpm**.

NOTE : If the exterior temperature reaches **40 °C**, the engine speed will return to **2000 rpm** in order to prevent the compressor from being cut off by the High Pressure safety device *(Pressostat).*

After the air conditioning has been on for three minutes, measure :
- the exterior temperature in the workshop,
- the temperature of the air coming out of the central vents.

Compare the two values using the table overleaf.

ALL TYPES	CHECKING THE EFFICIENCY OF THE AIR CONDITIONING SYSTEM

CHECKING TEMPERATURES. (continued)

		Vehicle using R134.a fluid (Compressor with variable capacity)					
Exterior temperature in °C		**40**	**35**	**30**	**25**	**20**	**15**
Temperature in °Cat the central vents	**Vehicles**						
	XANTIA	20 ± 3	16 ± 3	13 ± 3	11 ± 3	9 ± 3 **(*)**	8 ± 3
	XM	24 ± 3	18 ± 3	15 ± 3	13 ± 3	10 ± 3	8 ± 3
	SYNERGIE				12 ± 3	8 ± 3	

(*) At exterior temperature **20°C**, air temperature from the central vents is for second speed of the ventilator fan.
If fan operates at first speed, then air temperature from the central vents becomes **8.4 ± 3 °C**.
NOTE : In general, the temperature of the air being blown from the central vents should be around **5°C** to **8°C**.

CHECKING THE EFFICIENCY OF THE AIR CONDITIONING SYSTEM — ALL TYPES

CHECKING PRESSURES

TOOLS : 1 Charging station and **2** Thermometers.Observing the preliminary conditions, as well as vehicle equipment and checks (see page **287**) :After the air conditioning has been operating for three minutes, record the following parameters :

- The temperature of the air coming out of the central vents See the table on page **290**).
- The High Pressure.
- The Low Pressure.Compare the values recorded with the table below, or the graphs.

		Vehicle using R134.a fluid (Compressor with variable capacity)					
Exterior temperature in °C		**40**	**35**	**30**	**25**	**20**	**15**
	Vehicles						
High pressure (Bars)	**XANTIA (1)**	24 ± 3		21 ± 3		18 ± 3	14 ± 3
Low pressure (Bars)		4 ± 3	2.5 ± 3				4 ± 0.3
High pressure (Bars)	**XANTIA (2)**	21 ± 3			16 ± 3	14 ± 3	
Low pressure (Bars)		1.9 ± 3			1.4 ± 0.3		
High pressure (Bars)	**XM**	24 ± 0;3			19 ± 3	17 ± 3	15 ± 3
Low pressure (Bars)		4 ± 0.3	3 ± 0.3	2.5 ± 0.3			1.8 ± 0.3
High pressure (Bars)	**SYNERGIE**				16 ± 3	13 ± 3	
Low pressure (Bars)					2.1 ± 0.3		1.8 ± 0.3

(1) SANDEN Compressor *(Petrol engines : all types)* - **(2) = HARRISON** Compressor *(Diesel engines : all types).*
If the parameters recorded do not correspond to those in the above table, refer to the table (see page **290**).

ALL TYPES	CHECKING THE EFFICIENCY OF THE AIR CONDITIONING SYSTEM

CHECKING PRESSURES (continued)

	Low pressuretoo low	Low pressurenormal	Low pressuretoo high
High pressuretoo low	- Insufficient fluid charge. - Constriction of the HP system. - Dirty pressure control valve.	- Cooling fan speed unsuitable. - Faulty compressor.	- Faulty pressure control valve. - Faulty compressor.
High pressurenormal	- Faulty compressor. - Dirty evaporator.	- Circuit normal.	- Cooling fan speed unsuitable
High pressuretoo high	- Faulty pressure control valve. - System blocked. - Water in the system.	- Presence of solid matter in the system. - Dirty condenser.	- Excessive fluid charge. - Dirty condenser. - Faulty pressure control valve. - Cooling fan speed unsuitable.

Checking the pressure at temperatures between 15°C and 35°C for information only.
In general, the pressure should be approximately :
- for **R134.a** fluid, less than **2 Bar**s (Low pressure), and between **13** and **24 Bars** (High pressure).

AIR CONDITIONING SYSTEM R134.a

XANTIA All Types (Except V6 - XUD)

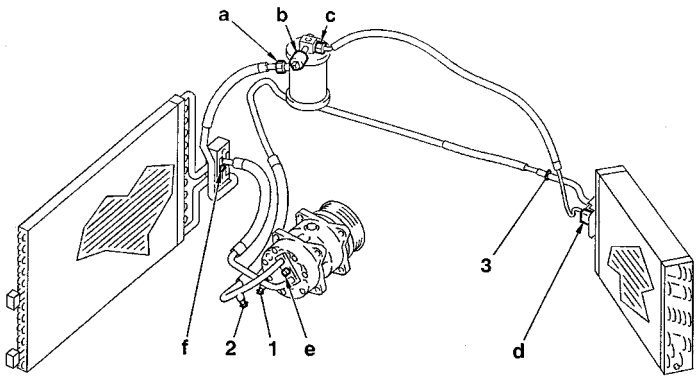

C5HP12GD

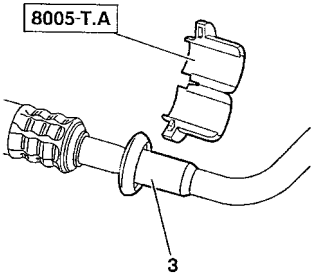

C5HP12EC

Tightening torques (m.daN).

a - **1.8**
b - **1.8**
c - **1.8**
d - **1**
e - **3.5**
f - **0.7**

(1) High pressure valve
(2) Low pressure valve
(3) Clickfit union

XANTIA V6	AIR CONDITIONING SYSTEM R134.a

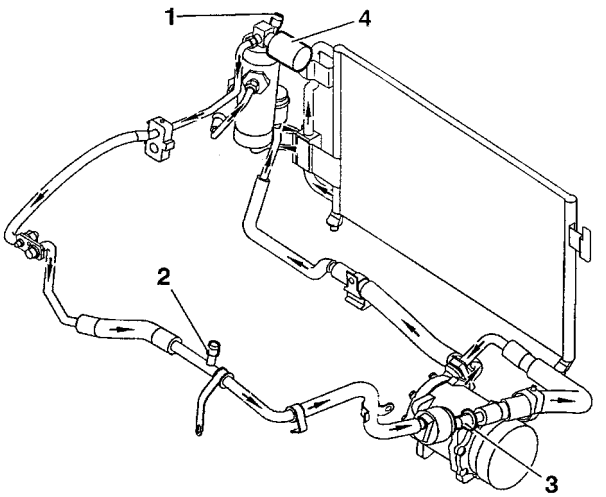

C5HP12HD

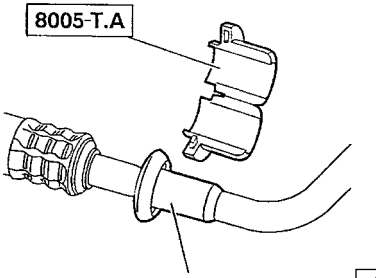

C5HP12EC

(1) High pressure valve
(2) Low pressure valve
(3) Clickfit union
(4) Pressostat

Checking the air conditioning circuit

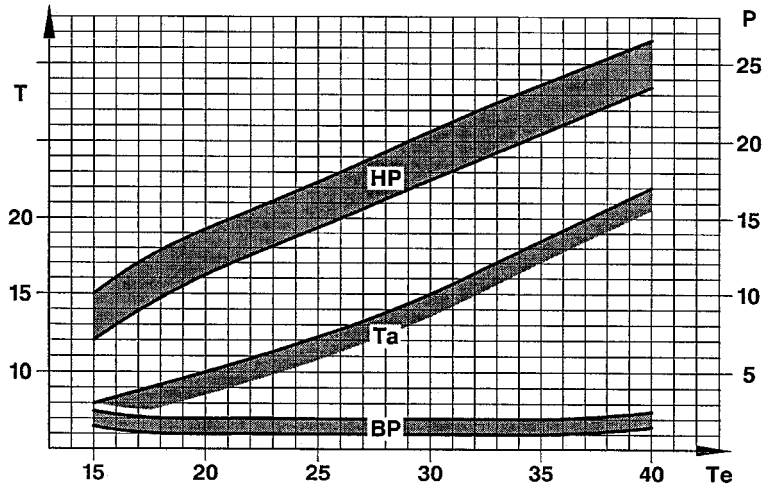

Key

T = Temperature **(C°)** and High Pressure **(Bars)**.

P = Low pressure **(Bars)**.

Te = Exterior temperature **(C°)**.

HP = Pressure at compressor outlet **(Bars)**.

Ta = Temperature of air blown from the central air vents **(C°)**.

BP = Pressure at compressor inlet **(Bars)**.

C5HP01ZD

XANTIA - XUD	AIR CONDITIONING SYSTEM R134.a

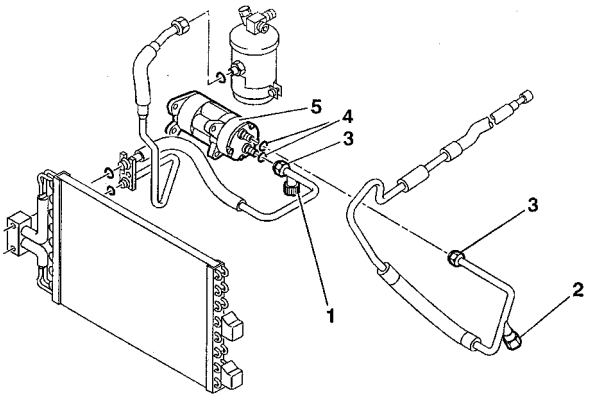

C5HP05XD

(1) - High pressure valve

(2) - Low pressure valve

Air conditioned **XANTIA XUD All Types** are equipped with a new **"HARRISON"** refrigeration compressor, with variable capacity.

All other models are fitted with a **"SANDEN"** compressor.

Parts modified.

(5) - **"HARRISON"** variable capacity compressor, reference **"DELPHI V5"**.

(3) - Air conditioning pipes, secured to the compressor with nuts instead of clamps.

(4) - Modified seals to suit the new attachments.Belt length : **1710 mm** instead of **1700 mm**.

Checking the air conditioning circuit

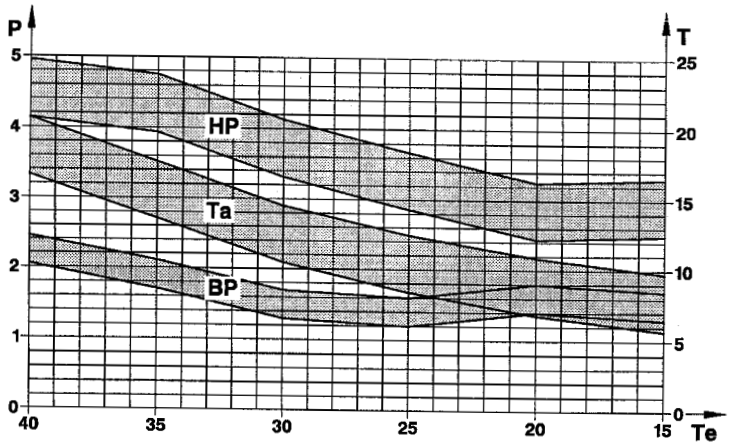

Key

T = Temperature **(C°)** and High Pressure **(Bars)**.

P = Low pressure **(Bars)**.

Te = Exterior temperature **(C°)**.

HP = Pressure at compressor outlet **(Bars)**.

Ta = Temperature of air blown from the central air vents **(C°)**.

BP = Pressure at compressor inlet **(Bars)**.

C5HP122D

XM - All Types (Except V6 - 2.5 TD)

AIR CONDITIONING SYSTEM R134.a

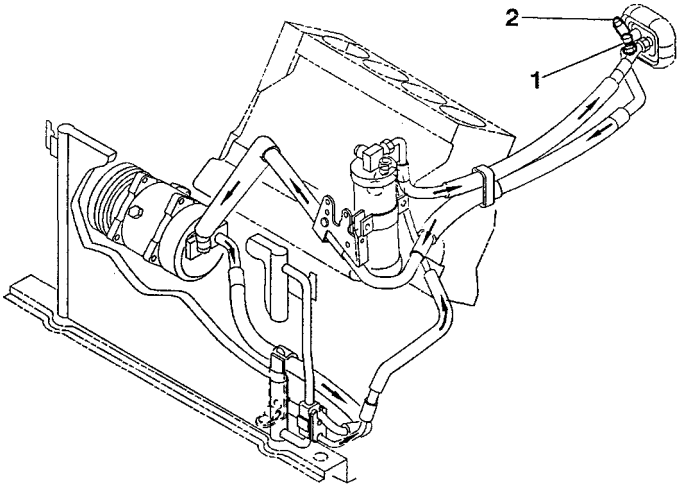

C5HP12JD

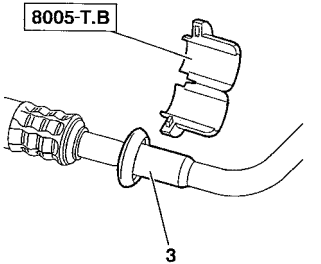

C5HP12KC

(1) High pressure valve
(2) Low pressure valve
(3) Clickfit union.

AIR CONDITIONING SYSTEM R134.a

XM - V6

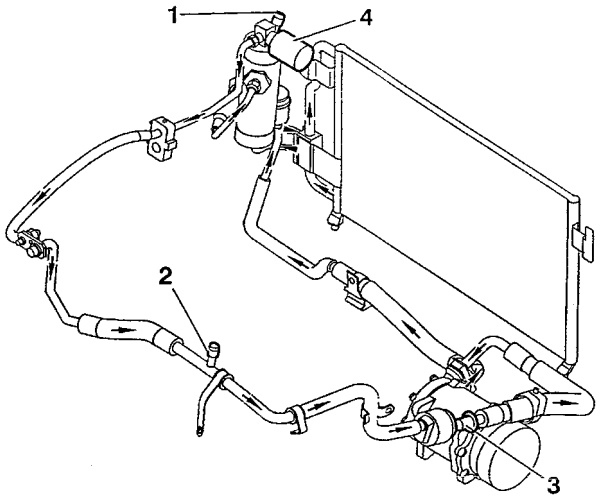

C5HP12HD

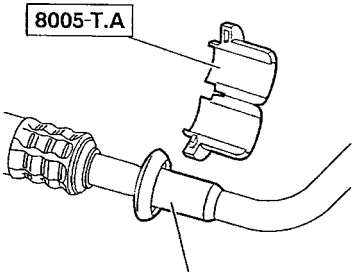

C5HP12EC

(1) High pressure valve
(2) Low pressure valve
(3) Clickfit union.

XM - 2.5 TD	AIR CONDITIONING SYSTEM R134.a

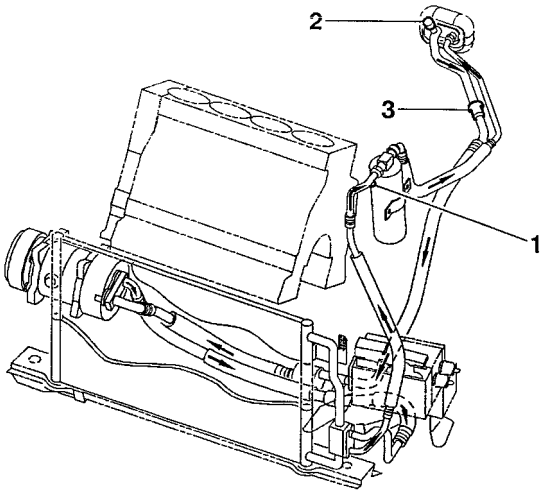

C5HP12LD

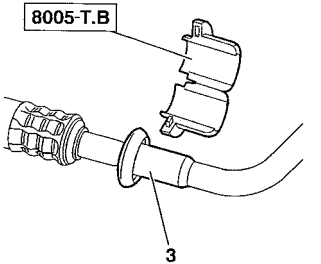

C5HP12KC

(1) High pressure valve
(2) Low pressure valve
(3) Clickfit union.

AIR CONDITIONING SYSTEM R134.a

XM - All Types

Checking the air conditioning circuit

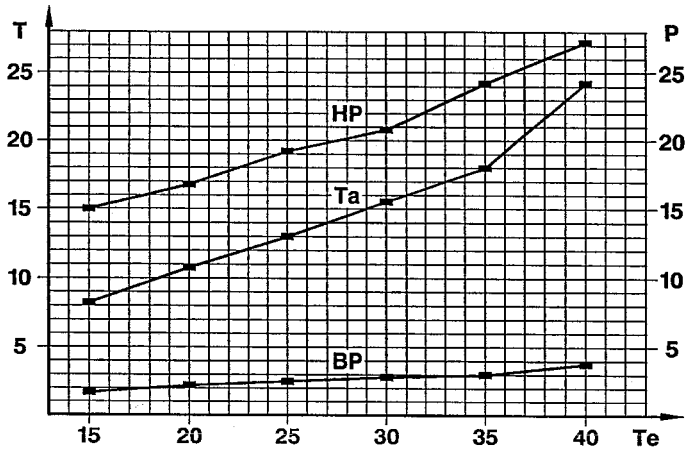

Key

T = Temperature **(C°)** and High Pressure **(Bars)**.

P = Low pressure **(Bars)**.

Te = Exterior temperature **(C°)**.

HP = Pressure at compressor outlet **(Bars)**.

Ta = Temperature of air blown from the central air vents **(C°)**.

BP = Pressure at compressor inlet **(Bars)**.

C5HP068D

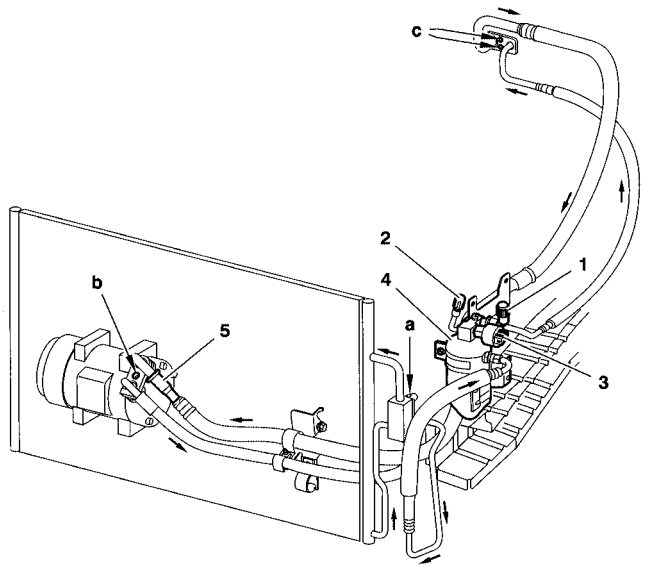

C5HP15PP

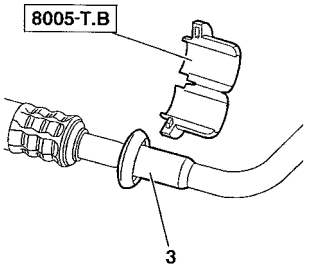

C5HP12EC

Tightening torques.

(1) High pressure valve
(2) Low pressure valve
(3) Pressostat, tighten to **1.8 m.daN**
(4) Dryer
(5) Clickfit union

a	**0.8 m.daN**
b	**4 m.daN**
c	**0.8 m.daN**

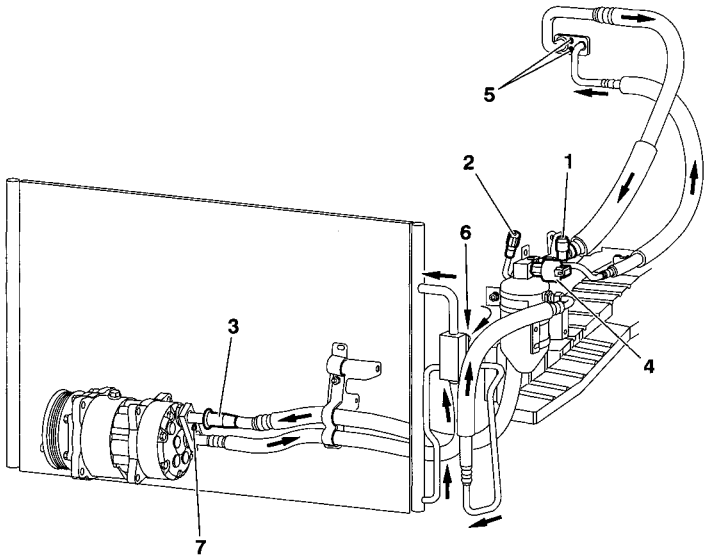

C5HP15EP

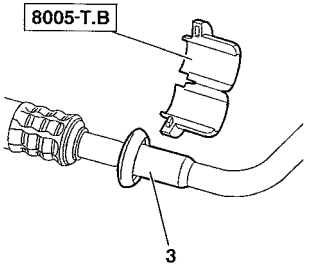

C5HP12EC

Tightening torques.

(1) High pressure valve
(2) Low pressure valve
(3) Clickfit union
(4) Pressostat, tighten to **1,8 m.daN**
(5) Flange fixing, tighten to **0,8 m.daN.**
(6) Flange fixing, tighten to **0,8 m.daN.**
(7) Flange fixing, tighten to **4 m.daN**.